No. 3945.

IN THE

United States Circuit Court of Appeals,

FOR THE NINTH CIRCUIT.

David G. Lorraine,
Appellant,
vs.
Francis M. Townsend, Milon J. Trumble and Alfred J. Gutzler, Doing Business Under the Firm Name of Trumble Gas Trap Company,
Appellees.

APPELLANT'S OPENING BRIEF.

WESTALL & WALLACE,
(Ernest L. Wallace and Joseph F. Westall)
By JOSEPH F. WESTALL.
Solicitors and of Counsel for Defendant-Appellant.

Parker, Stone & Baird Co., Law Printers, 232 New High St., Los Angeles.

FILED
FEB 19 1923

No. 3945.

IN THE

United States Circuit Court of Appeals,

FOR THE NINTH CIRCUIT.

David G. Lorraine,
Appellant,
vs.
Francis M. Townsend, Milon J. Trumble and Alfred J. Gutzler, Doing Business Under the Firm Name of Trumble Gas Trap Company,
Appellees.

APPELLANT'S OPENING BRIEF.

STATEMENT OF THE CASE.

This is an appeal from an interlocutory decree granting an injunction entered by the District Court for the Southern Division of the Southern District of California, which decree and injunction was based upon a finding that Letters Patent No. 1,269,134, granted to Milon J. Trumble, assignor of one-third to Francis M. Townsend, and one-third to Alfred J. Gutzler, (ap-

pellees here; plaintiffs in the District Court), on June 11, 1918, for Crude Petroleum and Natural Gas Separators (see Book of Exhibits, page 3, for specifications and drawings of the patent in suit) were valid; and that claims 1 to 4 thereof had been infringed by appellant, David G. Lorraine (defendant in the trial court). Said decree also found that claim 13 of said patent had not been infringed; but this finding being in favor of appellant, and no cross appeal having been taken, no question as to claim 13 is here presented.

The Patent in Suit.

Inasmuch as the device of the patent in suit (Book of Exhibits, page 3), is quite simple, and its mode of operation easily understandable without special knowledge of the art to which it relates, the following exposition would be superfluous if it did not segregate the relevant matters and throw the spotlight of emphasis upon those things which we contend to be controlling of the issues on this appeal. The Trumble separator consists merely of a closed tank or vessel into which a mixture of oil and gas, under pressure as it flows from an oil well, is conducted by a suitable pipe. Such gas-laden oil is sprayed in at the top of said chamber upon the apex of a cone-shaped plate, and flowing down over the surface of said cone and on to the side walls of the chamber is, during the process of separation, spread out evenly on the plate and the walls of the separator in a thin film. This spreading out permits the gas to become disentangled from

the oil. The oil level in the bottom of the chamber is maintained by a float-controlled outlet valve. The separated gas is conducted out of the chamber through a valve controlling the gas outlet. The form of construction of these valves will be found of little materiality on this appeal.

Emphasis is placed by the patentee on the maintenance of pressure in the chamber during the process of separation; thus, at line 120, page 2, of the specification (Book of Exhibits, page 6), Trumble says:

> "In the case of a wet gas, or a gas saturated with an oil of a lighter series, such as gasoline, it is desirable to maintain as high a pressure within the expansion chamber as may be practicable for the reason that a large amount of such light series will thereby be compressed and remain with the oil."

And again at page 3 of the specification, line 30, we find the patentee stating:

> "It will be noted that the action upon the oil while flowing down the wall of the expansion chamber in a thin film under pressure permits the free, dry gas to readily escape therefrom, while the pressure exerted upon the oil surface, backed by the wall of the chamber holds the lighter liquids, such as gasoline, in combination with the oil body, and I desire to be understood as pointing out and claiming this action as being of great benefit to the crude oil derived from the well on account of keeping the gasoline series in combination with the main body of oil."

Essence of the Trumble Alleged Invention.

When a client places the matter of an application for a patent in the hands of his solicitor, and the art to which it relates happens to be (like in the case at bar as will later appear), an exceedingly well developed one, the patent solicitor, if he is to efficiently serve his client must segregate in his own mind the narrow features of supposed novelty and invention inherent in his client's conception, whether is be a single element, a mode of operation, or a relationship between parts leading to a new result. In other words, he must see and recognize the *spirit* of the supposed invention before he can clothe that spirit with the body of a patent claim. In like manner before a court can intelligently construe a patent claim so as to pass upon issues of validity and infringement, it should disentangle itself from the maze of words and, looking through and around the language of the claims must discover the actual contribution to the art (if it be such), which the claim was designed to protect. Unless it does this, the court cannot intelligently avail itself of such important aids to construction as "the light of the prior art" (Walker on Patents (5th Ed.), page 243,, Sec. 184, and cases); "the position the patentee took before the Patent Office" (decision of this court in Selectasine Patents Co., *et al.*, v. Prestograph Company, 282 Fed. 223); nor is the court in position to construe so as to "cover the real invention" (if there happens to be any invention) (Walker on Patents (5th Ed.), page 239, Sec. 182, and cases);

or "so as to save the invention" (if it should transpire that there has been a valuable contribution to the art); nor can the court interpret the claims so as to give effect to *their spirit and intent* as distinguished from their letter." (Westinghouse v. Boyden, 170 U. S. 537.)

Now what was the essence of alleged invention here in issue? What theory of novelty underlies the grant of the patent in suit? Study and analysis of the specification and drawings of Trumble, and particularly of the proceedings upon which such patent was based (Plaintiff's Exhibit File Wrapper and Contents of Patent Suit; Book of Exhibits, page 9), as well as of the evidence and proceedings upon the trial enables us to answer such questions briefly and positively, and with no fear that the most careful consideration of this court will show our definition to be in any material respect inaccurate. The essence of supposed invention of Trumble consisted of means for spreading the *whole* body of the oil in a *thin film, equally* around and over, not only the surface of an *imperforate* conical spreader-plate, but upon all of the vertical walls of the separator above the oil level and below the periphery of such cone-shaped spreader-plates; and while so spread out on such extended surfaces (necessarily extended in order that *all* the oil might be reduced to a *thin film*) subjecting said oil-film, backed up by such surfaces, to pressure; that is to say, squeezing or pressing the oil-film against the

surfaces of the imperforate conical plate and vertical separator walls over which it was designed to flow.

As we shall make clear to the court in our discussion of the prior art and the admissions of the file-wrapper contents of the patent in suit in connection therewith, unless the claims in suit are construed so as to cover only a device in which *all* the oil is spread out in a *thin film of substantially equal thickness* over *all* the separator's vertical walls as well as over an imperforate conical plate or its equivalent, and in which the oil-flow upon such surfaces is sustained, that is to say, in which the oil does not leave such surfaces in any broken-up condition, and does not fall, in whole or in part, in drops or streams—unless the patent is so construed, the patentee will now be granted by judicial construction and decree those things which he expressly disclaimed during the progress of his patent application through the patent office as his contribution to the art, and which are uncontrovertibly shown by the record here to be old; and the public will be deprived of those things which it has purchased from prior inventors in this field at a cost of many seventeen-year grants—in short the public domain will be depleted to award to plaintiffs that to which they are not entitled.

Errors Assigned and Issues Outlined.

The Assignment of Errors [Transcript of Record, page 549], attacks generally and specifically not only the grant of an injunction, but all findings of the trial

court, express or implied, of invention, novelty, utility —in short, validity—of the patent in suit, as well as those findings as to infringement, upon any of which the decree of injunction appealed from might have been predicated.

In the interest, however, of sucinctness and clarity, the following informal explanation of the reasons of this appeal may be helpful: There are in this record fully proven patents admittedly granted long prior to the alleged date of invention of Trumble, responding literally to each of the claims in suit; that is to say, those claims are in all respects correctly descriptive of the disclosures of such prior patents. Now, our last statement might appear at first sight to be equivalent to an assertion that such claims are anticipated. Such, however, is not necessarily the case (although such matter is for the decision of this court); for while the claims do read *literally* on such prior devices, they are susceptible of a very narrow interpretation, and in the light of admissions in the nature of disclaimers in the patent office on the Trumble application—by a close and delicate analysis of the prior art, segregating certain features of novelty of Trumble—(assuming that such exceedingly narrow contribution constitutes patentable invention) and construing the claims so as to cover that only, the court may save such claims from anticipation, but by the same token must necessarily decide in favor of defendant on the issue of infringement; for any interpretation sufficiently narrow to save the Trumble claims

in suit from the prior art will exclude defendant's devices as infringements. The dilemma of plaintiff, therefore, is: The claims are either anticipated and void because they literally and correctly describe the disclosures of prior patents of record, or, construing them to read only upon the specific structure of the specification and drawings, there is no infringement.

The court will instantly see that the vital question is: What is the state of the prior art? Most naturally the court will turn to the opinion of the trial court for preliminary light upon that subject. Now, right here we place our finger upon the vital and controlling error complained of on this appeal: The discussion of the prior art is contained in one short paragraph in the trial court's opinion. EVERY STATEMENT IN SAID PARAGRAPH OF THE TRIAL COURT'S OPINION IS RADICALLY MISTAKEN AND ERRONEOUS AS TO THE FACTS. BUT FOR SUCH ERROR THE DECREE APPEALED FROM SURELY WOULD NOT HAVE BEEN ENTERED. The paragraph referred to reads as follows [See Trial Court's Opinion, Transcript of Record, p. 530, near bottom p. 538]:

> "The patents introduced as showing the prior art are readily disposed of. Exhibits 'E,' the McIntosh patent, 'F,' the Taylor patent, 'G,' the Barker patent, and 'J,' the Newman patent, all inject the oil from the well in the form of a spray, having the effect to reduce it to a finely divided condition, and the gas is thus permitted to escape. None of them are provided with baffle-plates except Newman, but the oil does not reach them

> except as sprayed upon them, and I think none of these patents contain the element in combination of pressure within the chamber. All these patents are obviated in their evidentiary effect by the restrictions of complainants' specifications and claims as made before the examiner. Exhibit 'H,' the Gray patent, is subject to the same criticism. The oil is there precipitated upon perforated cones, and only slightly if at all, flows down the wall of the chamber or other surface. Exhibit 'I,' the Cooper patent, injects the crude oil tangentially to the wall of the chamber, and causes it to flow down the wall more or less, and the gas escapes upwardly and passes out in a take-off at the top of the chamber. But this patent in combination contains no element of pressure. It must be observed that we are dealing with a combination patent, and all the elements must be read with reference thereto."

Now, in order that the court may understand the trend of our argument to follow, we point out briefly the errors complained of in the foregoing quoted paragraph from the trial court's opinion:

It is not true that Exhibit "E," McIntosh patent (Book of Exhibits, page 110); "F," Taylor patent (Book of Exhibits, page 115); and "J," the Newman patent (Book of Exhibits, page 136); all inject the oil from the well in the form of a spray, having the effect to reduce it to a finely divided condition. In fact none of them do this. Exhibit "G," the Barker patent (Book of Exhibits, page 121), is the only one that sprays the oil in to the chamber in a finely divided or broken up condition.

Neither is it true that none of them are provided with baffle plates except Newman; on the contrary, the fact is that ALL of them except Barker are provided with baffle plates. Further, in *none* of those which are provided with baffle plates is the oil sprayed upon them. Instead of *none* containing the element of pressure within the chamber they ALL, under the admission of defendant's expert as well as the uncontrovertible statements in the specifications themselves and other evidence of record, are shown to contain the element of pressure within the chamber.

It is not true that all or any of these patents are obviated in their evidentiary effect by restrictions of the specifications and claims as made before the Patent Office; for Exhibit "E," McIntosh patent (Book of Exhibits, page 110), for instance, *containing the precise combination of elements of each of the broadest claims of the Trumble patent in issue was entirely overlooked by the Patent Office.* Exhibit "I," the Cooper patent (Book of Exhibits, page 133), *was also overlooked by the Patent Office, and likewise responds to said claims and others.* The same is true of Exhibit "J," Newman patent (Book of Exhibits, page 139). If we neglect to read into the claims in suit the qualifications in the nature of disclaimers of the file-wrapper contents of the Trumble application, Exhibit "H," Bray patent (Book of Exhibits, page 127), is a *complete anticipation of all claims now in controversy.* Such claims read literally upon said Bray disclosure. The same is true of Exhibit "F," the

Taylor patent (Book of Exhibits, page 115), as well as others which will be discussed in our argument, the foregoing being simply intended as a preliminary outline showing the nature of our refutation of the trial court's findings as to the prior art.

The trial court found [Transcript of Record, page 542] that "defendant's patent" (which patent is found in the Book of Exhibits at page 66, being letters patent granted to D. G. Lorraine, reissued Nov. 8, 1921, No. 15,220) infringes claims 3 and 4 of the Trumble patent in suit. Of course, the court did not mean this literally, as, manifestly, the ownership or issuance of a patent does not constitute infringement. Obviously, what the court meant was the making or selling or using of a device constructed in accordance with defendant's patent infringes. Now, as a basis for such finding, the trial court explained in its opinion the construction, as the court understood it, of the device of defendant's said patent [Transcript of Record, page 537]. Here again, a most serious error is to be found. The court's reading of the drawings and description of defendant's patent is vitally mistaken; defendant's patented device does not contain or illustrate or describe any such baffle-plates as the court mentions in connection with its description, nor is oil divided into streams or projected upon any such baffle-plates as set forth in the trial court's opinion. We earnestly believe that if the trial court had fully grasped the meaning of the description and drawings, the decree appealed from would not have been entered.

Another error of sufficient importance to justify brief preliminary notice: In the trial court's opinion [Transcript of Record, middle of page 541], the court said: "Utility has been abundantly proven by the success achieved by plaintiffs' device." If this intended to imply that there is any evidence in the record tending in any degree to show that Trumble contributed anything whatever of value or utility to the art, it is, as we shall later show, clearly erroneous. So far as the evidence discloses, the device illustrated and described in the patent in suit was only useful *insofar as it incorporated means and devices long known and used in the art for identical purposes.* There is no evidence whatever in the record tending to show that any possible difference between the device of the Trumble patent and the prior art, either alone or in combination with other devices as set forth in the claims was in any respect advantageous or had any utility. The only basis of the finding of utility, therefor, was presumption—not evidence.

In the foregoing brief discussion of the trial court's opinion, we have endeavored to point out merely the keystone error of the structure. If in the following argument it shall appear that we have succeeded in doing this, the remainder will fall of its own weight.

ARGUMENT.

"Pressure Means," a Vital Element of the Trumble Combination is Disclosed—Not in None (as Found by the Trial Court) But in ALL the Prior Art Patents in Evidence.

In its opinion, after referring repeatedly to the part of the Trumble specification relating to pressure and pressure maintaining means, and quoting particularly [Transcript of Record, page 533], the patentee's explanation of the use, function, and value of maintaining pressure on the thin film of oil on extended surfaces within the separating chamber, the trial court [Transcript of Record, two-thirds down page 535], says:

> "The theory of the patentee is obviously that, pressure being maintained, the dry gas will readily escape from a thin film or body of oil passing down and against a wall or other surface, without at the same time taking off the lighter liquids, such as gasoline, which will yet remain in the crude oil and add to its value."

Having thus emphasized that pressure maintaining means (leaving out of consideration for the moment, the spreading of the oil in a thin film) is, under Trumble's theory of his alleged invention (which theory was sustained by the trial court), a vital and controlling element of his combination, the trial court [Transcript of Record, two-thirds down page 538], dealing with the question of anticipation or limitation

by the prior patented art, remarks, "The patents introduced as showing the prior art are readily disposed of," and after discussing several patented structures and their mode of operation, proceeds, "I think none of these patents contain the element in combination of pressure within the chamber," and later in the same paragraph [Transcript of Record, page 539], referring to defendant's Exhibit "I," Cooper patent (Book of Exhibits, page 133), the court concludes:

> "But this patent in combination contains no element of pressure. It must be observed that we are dealing with a combination patent, and all the elements must be read with reference thereto."

Thus, it is obvious that a pivotal point—no doubt the very crux of the trial court's decision as to the pertinence of the prior patented art of record is that, bearing in mind that to establish technical anticipation (not want of invention) the combination of elements of a patent claim in question as an entity, that is to say, the entire combination of each claim, must be disclosed or sufficiently implied in the description or drawings of the prior patent, and that the all-important or vital element of Trumble, namely, pressure maintaining means, is not disclosed in any of the prior art patents, and that, consequently, such art is entitled to little or no weight on questions of validity and interpretation of the claims in suit.

Now, as we have heretofore in our statement of the case set forth, we contend that the trial court greatly erred in "thinking" as it is expressed in the opinion,

or assuming or finding that none of these prior art patents disclosed pressure means, for our contention is that ALL *of them, either show or describe specifically such means or clearly imply the same, or under the uncontradicted testimony of plaintiffs' expert during normal operation they all must and do have such pressure means;* and furthermore, it has been recently judicially decided by a court of high authority (whose reasoning we believe will be found unassailable) that pressure in devices of the kind in controversy is a natural incident necessarily always present where gas and oil under normal pressure as it flows from a well is conducted into a closed vessel having as an outlet a pipe line to convey the gas to a place where it is to be used, and cannot of itself or in combination with other elements impart validity to a patent.

The importance and sharpness of the issue thus presented seems to justify its selection for first consideration. If we are correct in our contentions, it will be found that little remains to support the trial court's decision as to the pertinence of the prior art of record —and what little remains can be briefly and conclusively disposed of.

As will no doubt be immediately recognized by the court, unless the mixed oil and gas as it flows from the well is under pressure it will not flow. Indeed the specification of the patent in suit states and assumes this in such expressions, for instance, as at line 20, page 1, of the specifications, where application of the alleged invention is described in connection with "wells

where high pressure exists," also at line 21, page 1, of said specification, reading as follows:

> "My invention is also adapted to reduce the velocity and equalize the delivery of oil from wells in which the pressure of gas causes the oil to flow in gushes or by heads."

The source of any pressure in the tank is obviously the well. At Transcript of Record, page 86, this is admitted by plaintiffs' expert, Paul Paine, as follows:

> "Q. Then it finally comes down to a question of what is the pressure of the gas in the well; in other words, you must have pressure of gas in a well before you can get a pressure built up in the trap, must you not?
>
> A. Oh, yes, if there is no gas. If production is coming from the well there must be a pressure to push it in there before one can build up a pressure in the trap."

This pressure from the well normally is considerable. Plaintiffs' expert, Paine, [Transcript of Record, two-thirds down page 74], testified that under certain tests he made, pressure was 380 pounds per square inch at the top of the casing.

The United States Circuit Court of Appeals for the 8th Circuit, Judges Carland and Lewis, circuit judges, and Munger, district judge, in a very recent case decided at the September term, 1922, entitled Standard Oil Company, *et al.,* appellants, v. Oklahoma Natural Gas Company, appellee, reported at 284 Fed. 469, near the top of page 473, found that the usual pressure of

natural gas as it flows from the well through pipe lines to the cities for consumption averages 300 pounds per square inch.

The exact amount of pressure, however, is not material for present purposes, for we merely now wish to point out the obvious fact that if the gas under pressure is admitted into a closed vessel, such as plaintiffs' or defendant's devices, and pressure is maintained at the inlet of said vessel, there must be pressure in the vessel. It is also equally clear that if an outlet is provided of less capacity than the inlet there will still be pressure in the vessel. We believe it equally a matter of which the court will take judicial notice that if the diameter of the outlet pipe for gas is equal to the diameter for the inlet pipe (or within bounds even of greater diameter) there would still be pressure in the vessel or separator, because pipe friction would impede the outflow. However, we need not rely upon judicial notice of these matters for the uncontradicted testimony of plaintiffs' expert, Ford Harris, is clear and convincing. Mr. Harris testified [Transcript of Record, near bottom of page 175]:

> "Q. Now, suppose this gas was being carried a long distance, there would be more or less pipe line friction there, would there not?
>
> A. Why, certainly.
>
> Q. And that would have a tendency to cause a back-pressure in the gas trap which would show on the gas gage, would it not, or the pressure gage?
>
> A. Yes.

Q. Now, if this gas was connected up and being delivered to some absorbing plant, and they had a reduction nozzle or some other means for reducing the flow, that would cause a back-pressure, would it not?

* * * * * * * *

A. So far as maintaining the pressure on this trap is concerned, it is quite immaterial; that is, a pressure could be maintained either by a valve put directly at the trap or by a valve on the end of the line or perhaps by a contracted opening at the end of the line, which might be an absorption plant, or where it is delivered to the boilers, or anywhere. It is not necessary, to maintain the pressure on the trap, to put the pressure-maintaining valve at the trap; it can be placed at a distance."

It is therefore clear that pressure will always be maintained in a gas and oil separator connected by a suitable pipe to a flowing well, by reason of pipe friction if the outlet is through a pipe line; because of a partial choking of the outlet if there is a contracted orifice or a reduction nozzle or a valve at any place on the line; or if the gas is delivered to an absorption plant or to boilers for use.

Of course, the purpose of separating the gas from the oil is to use it, and in order that it may be used it must be conveyed somewhere, and if it is conveyed there must be a pipe line of some kind and an absorption plant or other apparatus at the end of the line. Thus, the usual and ordinary process of conveying the gas from any kind of gas separator and using it would maintain a pressure in the trap.

The foregoing obvious facts were recognized judicially in the decision of the Circuit Court of Appeals mentioned *supra* (Standard Oil Company, *et al.*, appellants, v. Oklahoma Natural Gas Company, appellee, 284 Fed. 469), when at page 473, the court says:

> "It appears from the evidence in the record that the usual pressure of natural gas as it flows from the wells through the pipe lines to the cities for consumption averages 300 pounds per square inch, and that this pressure is fixed by the requirements of the transportation system. That the pressure is not created or fixed for the purpose of extracting the gasoline content of the natural gas by absorption, but is fixed or created for the purpose of maintaining pressure upon the pipe line system that will transport the gas to the distant markets. It further appears from the evidence that the pressure used on natural gas for the purpose of obtaining gasoline by absorption is whatever pressure that exists on the transportation system where the absorption plant is located.
>
> "The claims of the patent require the natural gas to be under a pressure of not less than about 30 pounds to the square inch above atmospheric pressure, but Saybolt knew from the law of Henry the function that pressure would perform in the absorption of the gasoline vapor from natural gas. The pressure of the natural gas already existed to the knowledge of every one. If the natural pressure of natural gas as it comes from the wells is not sufficient to properly carry the gas to the cities for consumption, then compressors are used to increase the pressure and force the gas to its destination."

At page 475, the court further holds:

> "We have heretofore shown that Saybolt had nothing whatever to do with applying pressure to the natural gas, but simply took the gas at high pressure in the lines as he found it, and that in a gas transportation system a high pressure is used for transportation purposes solely. We do not think that the language above quoted distinguished Saybolt's claims from the prior art, especially when we consider that he had nothing whatever to do with the pressure which existed prior to his entrance into the field."

Pressure thus being necessary, and in fact inherent in the very use which the apparatus is intended to be put, it would seem to be no more necessary to illustrate or describe in the patent drawing or specification of the prior art means for maintaining pressure, such as the long pipe line, an absorption plant, boilers, contracted orifices at any place on the line (Such contracted orifices might be in the form of a valve for shutting down all but a small opening), than it would be for Trumble in his patent to illustrate the bottom of the well and the surrounding source of supply of initial pressure.

It should be borne in mind that Trumble does not claim any particular *amount of pressure* to be maintained within the chamber, nor does he *claim* any specific *means* for maintaining that pressure. Any pressure, variable or constant, above atmospheric pressure, from one ounce to hundreds of pounds would satisfy his claims.

There has not been the faintest suggestion in either evidence or argument on behalf of plaintiff that any novelty or invention resided in the particular means, *per se,* disclosed in the Trumble drawings for maintaining pressure, namely, the weighted safety valve 11; on the contrary, the failure of Trumble to describe or illustrate the construction (except by one small perspective outside view) or mode of operation of this valve (not to speak of his failure to claim it as a separate element) precludes him from so contending; for, as Walker on Patents (5th Ed.), page 220, Sec. 175, quoting from Columbia Motor Car Company v. Duerr & Company, 184 Fed. 893, remarks:

> "A patent is granted for solving a problem, not for stating one. Its description must explain the invention itself, the manner of making it, and the mode of putting it in practice. In the absence of knowledge on these points, the invention is not available to the public without further experiments and further exercise of inventive skill."

Faced by the dilemma of insufficiency of disclosure, Trumble is, therefore, driven to agree with us that the construction, application, use, function, and effect of the ordinary weighted or spring actuated safety or pressure valve, like or similar to this valve 11 (or performing the function stated for that valve—and Trumble only describes the function) was a matter of common knowledge among all those skilled in the art —in fact a matter of judicial notice, being common knowledge—long prior to the alleged date of invention

of Trumble (admitted to be not earlier than his application date, Nov. 9, 1914); and to merely show the outside of such a valve and state the purpose for which it was intended to be used was sufficient to enable anyone skilled in the art to select from the prior art a suitable device for such purpose (or, as plaintiffs' expert has suggested, to adopt other pressure maintaining means (the form not being material), such as a pipe line with its friction, a contracted orifice at any place on the line, an absorption plant or other apparatus such as boilers for use of the gas.

Almost any good dictionary published prior to November 9, 1914 (Trumble date of alleged invention), will be found to contain full description and illustration of such forms of pressure valve. Thus for instance, in Funk & Wagnalls New Standard Dictionary (our copy bearing copyright notice of 1913), under "Safety valve," page 2157, is found not only a full description, but also a number of clear illustrations of such form of weighted pressure valve and its mode of construction, and again under "valve," page 2629 of the same authority, is found a reference and description of many other forms of valves which obviously could be used for controlling such pressure, notably a valve described as "back pressure valve."

There can be no doubt of the court's authority to take judicial notice of the meaning of words appearing in the dictionary (see Jones on Evidence, civil cases; thin paper pocket edition, section 130), and indeed the Court of Appeals for the Third Circuit in Werk

et al. v. Parker, 231 Fed. 121 (Buffington, McPherson and Woolley, circuit judges), in a patent case took judicial notice not only of such matter found in dictionaries, but of encyclopedias, and periodicals, as well as special works relating to the art therein involved. (See also Walker on Patents (5th Ed.), page 570, Sec. 505; Jones on Evidence (thin paper pocket edition) Sec. 128, relating particularly to patent causes.)

That "means to maintain pressure" *per se,* is to be deemed old for the purpose of this proceeding is, moreover, conclusively presumed as a matter of law from the fact that Trumble claimed this element only in combination and not separately. Thus, Hopkins on Patents, page 214, Sec. 137, reads as follows:

> "Sec. 137, Rule XXXVII.. In a combination claim each element is conclusively presumed as a matter of law to be old, whether old in fact or not.
>
> The foundation of this rule is, that if, among the elements, there is one which is itself patentably new, it must be separately claimed, or it is dedicated to the public by its inventor's failure to claim it. Thus Judge Baker has said:
>
> 'The failure to claim either one of the elements separately raises the presumption that no one of them is novel.' (Citing Campbell v. Conde Implement Co., 74 Fed. Rep. 745.) And Judge Woods has said: "When a combination is claimed, there arises an implied concession that the elements are old, and not separately patentable." (Citing Hay v. Heath Cycle Co., 71 Fed. Rep. 411-413, 18 C. C. A. 157.)' "

It is, therefore, we submit, to be deemed established, (1) as a presumption of fact arising from Trumble's failure to illustrate or describe the construction of this pressure valve 11; (2) as a presumption of law resulting from his failure to claim it separately as an element (3) as the only horn of the dilemma to sustain the patent on the question of sufficiency of disclosure; (4) from facts of which the court should take judicial notice—that the construction, function, and mode of operation of Trumble's means for maintaining pressure, or any of the equivalents thereof described by plaintiffs' expert, Ford Harris, was old and well known in the art prior to the alleged Trumble invention.

It is elementary in the law of patents that it is not necessary to illustrate or describe those elements or features which in the attempted utilization of the disclosure any mechanic by the exercise of the usual skill of his calling would be able to supply. Thus, Walker on Patents (5th Ed.), page 214, Sec. 174, says:

> "The description of the invention, which forms a part of every specification, is required to set forth that invention, and the manner and process of making and using it, in such full, clear, concise, and exact terms as to enable any person skilled in the art or science to which it appertains, or with which it is most nearly connected, to make and use the same; and in case of a machine, the description is required to explain the principle thereof, and the mode of applying that principle which the inventor believes to be the best." (Citing Revised

Statutes, section 4888; Continental Paper Bag Co. v. Eastern Bag Co., 210 U. S. 405, 1908.)

Quoting Mr. Justice Bradley in Loom Co. v. Higgins, Walker on Patents (5th Ed.), page 215, Sec. 174, says:

> "If a mechanical engineer invents an improvement on any of the appendages of a steam-engine, such as the valve-gear, the condenser, the steam-chest, the walking-beam, the parallel motion, or what not, he is not obliged, in order to make himself understood, to describe the engine, nor the particular appendage to which the improvement refers, nor its mode of connection with the principal machine. These are already familiar to others skilled in that kind of machinery. He may begin at the point where his invention begins, and describe what he has made that is new, and what it replaces of the old."

The contributions of mechanical skill necessary to the utilization of a patented device being thus impliedly contained in every patent description, with much stronger reason it would seem, elements or features not deliberately added by the skilled mechanic to correct or complete the patent description, but resulting as necessary incidents from the placing and connecting of such device in the manner in which it was designed to be applied and operated, should be held to be part of such description.

Even then if the trial court were correct in its assumption that the element of pressure is not disclosed in any of the prior art patents of record, it would not follow that the value of such evidence on the question of anticipation or as compelling a close and narrow interpretation of the claims would be in any degree lessened. In other words, if pressure means are necessarily implied in a common and ordinary and intended use of the prior art devices, such means need not be expressly described or illustrated.

The purpose of our thus pressing upon the attention of this court the necessity of taking cognizance of those things which cannot be escaped in the practical utilization of such prior art devices is merely to most glaringly exhibit the fallacy of one of the trial court's most vital conclusions. But we need not rely upon any such necessarily implied pressure means: patents which we shall now proceed to discuss, admittedly granted long prior to any alleged invention of Trumble, *expressly, and unequivocally show or describe such pressure means* in combination with all the other elements of the Trumble claims is controversy.

COOPER PATENT.

Cooper Patent (Granted Over Eight and One-Half Years Prior to Trumble's Alleged Date of Invention) (Defendant's Exhibit "I", Book of Exhibits Page 133) Which the Trial Court Brushed Aside (Transcript of Record, Page 539) as of Little Pertinence, on the Assumption That it Contained no "Element of Pressure" Distinctly Tells Us That the Device is to be Included in a Pressure System, Mentions Pressure Repeatedly, Finally Stating, "a High Pressure of Gas May Thus be Maintained in This Cylinder." This Patent was Overlooked by the Patent Office. Claims of Trumble Read Literally on This Reference; and the Trial Court was Clearly Mistaken in Implying (if any Such Implication was Intended) That all the Oil was not Spread in a Thin Film on the Walls of the Cooper Expansion Chamber.

The trial court's entire finding with reference to the pertinence of the Cooper disclosure [Transcript of Record, page 538, and near top of page 539], is as follows:

> "The patents introduced as showing the prior art are readily disposed of. * * * Exhibit 'I', the Cooper patent, injects the crude oil tangentially to the wall of the chamber, and causes it to flow down the wall more or less, and the gas escapes upwardly and passes out in a take-off at the top

> of the chamber. But this patent in combination contains no element of pressure. It must be observed that we are dealing with a combination patent, and all the elements must be read with reference thereto."

A brief examination of the very short patent description of Cooper in connection with Fig. 1 of his drawings (Book of Exhibits, page 133), will make clear the construction and mode of operation of this separator. (We also shall exhibit to the court on the argument a model of the device made to the scale of Fig. 1 and have prepared for use an oral argument like models of each of the prior art devices to be referred to.)

Briefly, the mixed oil and gas as it flows from the well enters through the pipe B, the end of this inlet pipe being flattened out to fit a slot-like opening into the Cooper separating or expansion chamber A. The manner in which this inlet pipe opens into such expansion chamber is clearly shown in Fig. 2, which also shows the mode in which the wearing plate a' is disposed with reference to the inlet opening of the chamber. The oil and gas is thus injected, as the trial court correctly found, tangentially on the wall of the chamber; but the trial court is obviously incorrect in the implication (if it is intended as an implication) that possibly less than all of the oil flows down the wall; for clearly all the oil is directed against the wearing plate a' and wall and all *must* be spread upon such wall and if all of the oil is spread on the wall, of course it must flow down the wall. If, however, the mere

possibility that some of the oil may leave the wall and fall to the bottom of the chamber (instead of flowing down the sides of the chamber) should exclude or weaken this reference as an anticipation, then, with stronger reason (as the court will see when it considers the question of infringement), *the actual fact* that a very large proportion of the oil is not spread on the wall of defendant's device, but falls to the bottom of the chamber, must conclusively establish that defendant does not infringe.

Does Cooper disclose pressure? At line 21, page 1, of his specification (Book of Exhibits, page 134), Cooper tells us distinctly that his device is "included in a *pressure* system," and at line 22, page 1, of the specification he says that the constituents are separated "without affecting the general *pressure* in the system." At line 30, page 1, of his specification, Cooper says that the object of his invention is "to efficiently separate and deliver the gas, oil, water and sand from a *pressure system.*" At line 59, page 1, of the specification, he says that the gas outlet pipe F leads to a compressor. (Remember that Ford Harris says that a pipeline, boiler, or absorption plant would be equivalent to a valve for the purpose of maintaining pressure.) At line 61, page 1, the Cooper specification discloses clearly that *pressure* must exist by the statement, "gas, oil, water, silt, and sand are *forced* from near the bottom of the well by the compressed gas and passed through the pipe B into the cylinder A." At line 63, Cooper further says: "Entering the cylinder

under pressure tangentially to its circumference * * *." At line 73, page 1, of the specification, Cooper says:

> "When these constituents (oil, sand and water), accumulate to raise the oil to a certain level the float c rises and opens the cock c, thereby permitting the oil *to be forced out by the internal pressure in the system* * * *."

At line 83, page 1, of his specification, Cooper finally says:

"A high pressure of gas may thus be maintained in this cylinder." (Italics ours.)

Certainly, therefore, Cooper contemplated that his device was to be used in a pressure system, and that separation was to take place under pressure. As the court has seen from a consideration of the decision of the Circuit Court of Appeals for the 8th Circuit in the case of Standard Oil Co., *et al.*, v. Oklahoma Natural Gas Company, 284 Fed. 569 (cited and considered *supra*), pressure, being a natural and necessary incident of a gas line, it would be difficult to connect the Cooper separator (or any other separator) to a flowing well and not have pressure in the separating chamber.

Surely, if gas and oil come into this vessel under a normal pressure of 300 to 400 pounds per square inch, it is obvious that the outlet F being of the same diameter as the inlet there would be some pressure in the system (and Trumble, as before pointed out, calls for no particular amount of pressure), even if

Cooper did not repeatedly tell us that it was to be used in a pressure system. If this is not obvious, then the court should be guided by the uncontradicted testimony of plaintiffs' expert, Ford Harris, who states that pipe friction, or an absorption plant, or boilers at the end of the line would maintain pressure. Remember also that back pressure valves, such as safety valves and others illustrated in any old dictionary (of which we have seen the court should take judicial notice without proof, being matters of common knowledge) were old, and their construction, function, and mode of operation well known long before the pretended Trumble invention. Indeed, as we have seen, it is conclusively presumed as a matter of law that such element as pressure maintaining means is old because of Trumble's failure to claim it separately.

Suppose that a skillful mechanic in this art, before November 9, 1914 (Trumble's date of alleged invention) had desired to utilize the Cooper separator, and suppose he found that pipe friction or a compressor, or absorption plant, or contracted orifice, mentioned by plaintiffs' expert Harris did not build up the amount of pressure he desired. Applying the teachings of Cooper with understanding, and referring to those repeated instructions of Cooper to use his device in a *pressure system* and particularly to the statement, "a high pressure of gas may thus be maintained in the cylinder," and being of necessity, as a matter of law, charged with at least the common knowledge found in the dictionary that back-pressure valves of various

forms were well known in the art, he would of course, add to the pressure already existing in the device by the employment of an old form of back-pressure valve or by one of the old methods or devices referred to by plaintiffs' expert.

If it was not necessary for the sufficiency of the disclosure of Trumble to more than show the outside of a pressure-valve and indicate its function, surely it was not necessary for the sufficiency of Cooper's disclosure to more than tell us nine or ten times that pressure was to be maintained.

It thus appears that the only reason given by the trial court (namely, because of the assumed absence of pressure in the Cooper separator), for not either declaring void or strictly construing the claims of Trumble in view of the Cooper disclosure, is based upon a mistake of fact.

Trumble Claims Reading as They do Literally on the Cooper Disclosure, can Only be Saved From a Finding of Invalidity by a Most Strict Construction in the Light of the Specifications and Drawings of Trumble, as Well as of the Position Trumbell Took Before the Patent Office; That is to Say, by an Interpretation Implying or Reading Into the Trumble Claims Limitation not Distinctly Expressed Therein. Under any Interpretation Sufficiently Narrow to Avoid Anticipation by Cooper, Defendant (as Will Later Appear) Does not Infringe.

Unmistakably, Cooper discloses that oil and gas separators for the identical purposes described by

Trumble, and employing those features decided by the trial court to be of the essence of the alleged Trumble invention, namely, the spreading of the oil in a thin film on the wall of the separator and subjecting such film to pressure as it flowed down such wall, were old seven and one-half years before Trumble even pretended to have invented them.

One of the wisest—and most just because of its wisdom—of rules for the interpretation of patent claims is to determine what if anything a patentee added to the art and then, if possible, to construe his claims so as to cover and protect that contribution. The intelligent application of this rule gives to the patentee the full measure of protection to which he is entitled, and also guards the public against unjust and unauthorized monopoly.

What did Trumble invent, if anything? Certainly, the theory of the trial court as to his contribution cannot be sustained in view of the Cooper disclosure.

Of course, the combination of the claims in suit is the technical definition of Trumble's alleged invention; and the question of anticipation by a prior patent must be determined by comparing the language of those claims with the disclosure of such prior patent. Comparing the Cooper drawings and description with claim 3 of Trumble, for instance, we find that Cooper discloses, "in an oil and gas separator, the combination of an expansion chamber" (Chamber A); "having a surface (wearing plate a' and wall of the chamber A) adapted to sustain a flow of oil thereover in a thin

body"; "means for distributing oil on to such surface"; (slotted inlet opening a); "pressure maintaining means arranged and adapted to maintain a pressure on one side of the flowing oil" (Oil outlet F and pipeline with its friction as described by plaintiffs' expert, Harris, or contracted orifice, valve, or compressor or absorption plant, described as being at the end of the line—in short any admittedly well known means to maintain the high pressure repeatedly spoken of throughout Cooper's specification); "withdrawing means to take gas from the chamber" (the gas outlet) "means for withdrawing old from the chamber" (pipe D and its connections).

The difference between claims 3 and 4 is slight and immaterial to the present comparison. Practically the same reading applies to claim 4.

Claim 1 of Trumble does not call for "means for maintaining pressure" or "pressure means" and a comparison will show that said claim 1, with the exception of the language of the claim requiring the oil and gas to be received in its "upper portion," exactly describes the Cooper separator.

We contend that to raise the oil inlet of Cooper so that instead of being in the middle portion of the expansion chamber, it would deliver the oil a little higher, would not involve invention. The only object of delivering the oil in the upper portion of the chamber is to allow a sufficient distance for it to flow over to effect separation. Patent drawings are not working drawings. (See Walker on Patents, 5th Ed., page

146, last paragraph of section 126 and authorities cited.) Such drawings are only intended to illustrate an invention, and obviously if it were found on actual test of the Cooper device (on account of large volume or pressure of the flowing oil, for instance), that a change of proportions or the relative raising of the oil inlet would improve operation—it would not require inventive genius to do this in view of the full disclosure of the intended action of the oil in the Cooper expansion chamber. The raising of the oil inlet would be a mere matter of degree not affecting the contribution to the art. Furthermore, the idea of injecting the oil in the upper portion of the chamber, in combination with the other elements of the Trumble claims was old, as will be shown by other prior patents, all of which are pertinent in connection with Cooper on this question of interpretation and invention.

The oil inlet of Cooper is very slightly below the middle of the separating chamber. Suppose that after the grant of the Cooper patent someone should have made an application for a patent in which he exactly copied the Cooper drawings and specifications except that he showed and described the Cooper inlet above the middle of the chamber (so that it might be described as being in the upper portion of the chamber as called for by Trumble claim 1), is it conceivable that the Patent Office would have allowed such an application, or if by any chance granted, that any court would sustain the same as involving patentable invention? We think the answer is obvious consider-

ing even the Cooper specifications and drawings alone; but when it is further shown that the arrangement of the inlet to inject oil and gas into the upper portion of the chamber was old long before Trumble as shown by numerous other prior patents (for instance, Defendant's Exhibit "E," McIntosh patent (Book of Exhibits, page 110); Defendant's Exhibit "F," Taylor patent (Book of Exhibits, page 115); Defendant's Exhibit "H", Bray patent (Book of Exhibits, page 127); Defendant's Exhibit "G", Barker patent (Book of Exhibits, page 121); Defendant's Exhibit "J", Newman patent (Book of Exhibits, page 139); many of which also contain the combination of the Trumble claims, we submit that any suggestion of possible invention in slightly raising the oil inlet of Cooper is too trifling for even a moment's serious consideration.

Claim 2, not containing the limitation as to the inlet of gas and oil in the upper portion of the chamber, reads literally on the Cooper device, to the same extent as do claims 3 and 4.

Can Cooper be Avoided as an Antcipation of the Trumble Claims.

At line 33, page 1, of his specification, Trumble tells us (italics ours) that his invention consists *"in the arrangement"* as well as in the combination of parts thereinafter in his specification and claims set forth. In Plaintiffs' Exhibit 2, Trumble File Wrapper and Contents (Book of Exhibits, page 9), in a communi-

cation to the Commissioner of Patents, dated March 1, 1915 (Book of Exhibits, middle of page 35), Trumble says:

> "Applicant's specification and claims are now written to define the *peculiar arrangement of applicant's device which is the means for causing the oil to be divided into a thin flowing body* * * *." (Italics ours.)

On the same page plaintiffs also objects to Barker as a reference because he says that in Barker "there *are no means shown for expanding the oil* in such manner that it may flow in a thin film * * *." (Italics ours.) On the same page Trumble likewise objects to Bray as a reference, because the oil flows downwardly in drops or *streams* rather than in a thin film (though Bray (Book of Exhibits, page 127), *does* show spreader cones having very substantial surfaces for the spreading of the oil and directing it upon the walls of the chamber.)

At Book of Exhibits, page 42, Trumble, in order to secure favorable action of the Patent Office, was obliged to define his invention very specifically, which he did as follows (italics ours):

> "Applicant's invention consists of a containing vessel, *an imperforate cone adopted to spread the whole body of the oil to the outer edge of the vessel,* and means for taking off gas from the interior of the cone near the center of the vessel."

With the "arrangement" of his elements thus emphasized— not only in the application proceedings be-

fore the Patent Office, but in the Trumble specification as finally allowed—and with his repeated references to the specific means constituting the most vital part of the arrangement for spreading the oil out in a thin film, namely, the spreader cones 22-22a, and bearing in mind that the use of such imperforate cones for spreading the oil in a thin film and spreading it out in such condition equally on all walls of the chamber is the only substantial difference to be found between Trumble and Cooper, we submit that to avoid Cooper as an anticipation (assuming for the moment invention in this infinitesimal contribution to the art over Cooper; and also overlooking the fact that in view of the art which we shall later call to the attention of the court, Trumble cannot be given credit for even this minute contribution) the court should construe the element of the Trumble claims, described as "means for spreading the oil over the wall of such chamber." (Substantially, all Trumble claims except claim 4) and the element of claim 4 described as "means within the chamber adapted to cause the oil to flow in a thin body for a distance" as applying strictly to the imperforate spreader cones 22-22a of Trumble or their clear equivalent. While Cooper contains a wearing plate a', this may be held not to be the equivalent of the Trumble cones because it does not spread out and direct equally around and over all the walls of the separator in the manner provided by the cones.

In urging that this is a proper interpretation of the Trumble claims, we remind the court that the law is well settled that the word "means" in a patent claim followed by a statement of function (to use the language of Walker on Patents (5th Ed.), page 138, Sec. 117a:

> "* * * will not include all means, mechanisms, or devices which can perform that function, but only those which are shown in the patent, and their equivalents." (Citing the following cases: Dudley E. Jones Co. v. Munger Mfg. Co., 49 F. R. 64, 1891; Williams v. Steam Gauge & Lantern Co., 47 F. R. 323, 1891; Colts Patent Firearms Mfg. Co. v. Wesson, 127 F. R. 333, 1903; American Can Co. v. Hickmott Asparagus Co., 142 F. R. 141, 1905; Union Match Co. v. Diamond Match Co., 162 F. R. 148, 1908; Continental Paper Bag Co. v. Eastern Paper Bag Co., 210 U. S. 405, 1908.)

In the case of Mossberg *et al.* v. Nutter *et al.,* 135 Fed. 95, the Circuit Court of Appeals for the First Circuit, Judges Colt and Putnam, circuit judges, and Aldrich, district judge, after a careful analysis of the specification and drawings of a patent and of the prior art, on page 99, said:

> "The claims of a patent are to be fairly construed, so as to cover, if possible, the invention, and thus save it, especially if it is be a meritorious one. In approaching a patent, we are to look primarily at the thing which the inventor conceived and described in his patent, and the claims

are to be interpreted with this particular thing ever before our eyes. In confining our attention too exclusively to a critical examination of the claims, we are apt to look at them as separate and independent entities, and to lose sight of the important consideration that the real invention is to be found in the specification and drawings, and that the language of the claims is to be construed in the light of what is there shown and described."

* * * * * * * * *

"The claims, however, must be read in connection with the drawings and specification; and, so construed, we find, in each of these claims, appropriate language descriptive of the vital feature of the Ericson invention. * * * These several phrases, when read with the drawings and specification, were manifestly intended to cover, and do distinctly cover by their language, the primary feature of the Ericson invention. If these terms are susceptible of a broader interpretation, they must by construction be limited to Ericson's actual invention."

In the case of Robins Conveying Belt Company v. American Road Machine Co., 145 Fed. 923, the Court of Appeals for the Third Circuit (Judges Dallas and Gray, circuit judges, and Cross, district judge), the court quoted (page 926) as follows:

"In a case of doubt, where the claim is fairly susceptible of two constructions, that one will be adopted which will preserve to the patentee his actual invention." (McClain v. Ortmayer, 141 U. S. 419, 425, 12 Sup. Ct. 76, 78, 35 L. Ed. 800.)

"The court should proceed in a liberal spirit, so as to sustain the patent and the construction claimed by the patentee himself, if this can be done consistently with the language which he has employed." (Klein v. Russell, 19 Wall. 433, 466, 22 L. Ed. 116.) "The claim must be read in the light of the description, and, if it be fairly susceptible of two meanings, that construction must be adopted which will sustain, rather than defeat, the patent." (McEwan Bros. Co. v. McEwan (C. C.) 91 Fed. 787. See, also, Stilwell-Bierce & Smith-Vaile Co. v. Eufaula Cotton Oil Co., 117 Fed. 410, 414, 54 C. C. A. 584; Electric Smelting & Aluminum Co. v. Carborundum Co., 102 Fed. 618, 42 C. C. A. 537; Hogg v. Emerson, 11 How. 587, 606, 13 L. Ed. 824.) "There interpreted, all doubts are dissipated, and we find that the claim requires that the three pulleys be mounted with their axes in the same vertical plane."

In Diamond Patent Company v. S. E. Carr Co., 217 Fed. 401, this court quoted (page 406) approvingly the clear and forceful language of the Court of Appeals for the 3rd circuit in the case of 1900 Washer Company v. Cranmer Co. *et al.*, 169 Fed. 629, at page 632, refuting an argument for the literal reading of a claim, said:

"This may be true, if we stick in the bark, by looking at the language of the claim, dissociated from the specifications; but no invention can be practically or fairly understood or explained, if such dissociation is absolutely adhered to. As we

> have already shown, the element described in the first claim, as 'means for actuating said lever,' must not be taken to be any means, such as impracticable hand power applied to the lever, but the efficient practical means described in the specifications."

That "the position the patentee took before the patent office" as shown by the file wrapper and contents of his patent application, is to be taken into consideration in construing claims was so very recently decided by this court in Selectasine Patent Co. v. Prest-o-graph Company (Judges Gilbert, Ross and Hunt, Circuit Judges) 282 Fed. 223, that there can surely be no question as to the reasonableness of endeavoring to gather from the arguments and admissions in such file wrapper contents, in connection with the patent specification, the supposed invention, and the real invention (if there be such) to the end that the claims may be construed in the light of such proceedings, for the purpose of protecting the real contribution to the art (if there has been a contribution). So construing the Trumble claims, Cooper does not technically anticipate (although we are still faced by the hair-splitting question of whether or not such claims disclose even a microscopic amount of invention over Cooper) in view of other prior art (particularly in view of patent to Bray, Defendant's Exhibit "H," Book of Exhibits, page 127).

Now, if the foregoing suggestions as to a permissible interpretation of the Trumble claims to avoid

Cooper as an anticipation are adopted, namely, if the court holds with us that there is no anticipation by Cooper because the element described in the Trumble claims, substantially as, "means for spreading the oil over the wall of such chamber" (claims 1 to 3 inclusive), and "means adapted to cause the oil to flow in a thin body" (claim 4), (which a reference to the specification shows to be the spreader cones of Trumble, 22 and 23a) are not disclosed in Cooper; and that the wearing plate a' is not the equivalent of such means because (while, as a matter of fact it does form a surface over which the oil is preliminarily spread in a thin film and directed upon the wall of the separator), it does not spread the oil equally around and over all of the walls of the Cooper separator, then, as the court will see when the question is considered, there is no infringement because, (among other things) defendant's device (like that of Cooper—or even less than Cooper because it contains no wearing plate a') contains no equivalent of such spreader cones.

McINTOSH PATENT.

Defendant's Exhibit "E," McIntosh Patent (Granted Nearly Two Years Prior to Trumble's Date of Alleged Invention) (Book of Exhibits, Page 110), Overlooked by the Patent Office on Trumble's Application, Discloses Clearly What the Trial Court Found to Be the Essence of the Alleged Trumble Invention. Moreover, Under the Interpretation Necessarily Placed by the Trial Court Upon the Trumble Claims in Order to Find Infringement by Defendant's Device, McIntosh Discloses a Complete Anticipation. There Is No Question but That McIntosh Spreads the Oil in a Thin Film on Extended Surfaces, i. e., Imperforate Conical Plates, and While so Spread Subjects the Oil Backed by Such Surfaces to Pressure. The Trial Court Greatly Erred in Stating That the Oil in McIntosh Was Injected Into the Separator in the Form of a Spray; on the Contrary, the Oil Is Injected Into the McIntosh Separator in a Less Agitated Condition Than in Trumble's Separator. McIntosh Provides Specific and Very Effective Means to Maintain Pressure. Unless the Trumble Claims Are Construed as Covering Only a Combination in Which the Oil Is Spread Upon Imperforate Cones, and by Them Upon the Walls of the Separator, They Are Anticipated and Void in View of Bray.

The trial court's findings (transcript of record, near bottom of page 538) with reference to McIntosh patent is as follows:

"Exhibit 'E,' the McIntosh patent [together with several other patents mentioned by the court] all inject the oil from the well in the form of a spray, having the effect to reduce it to a finely divided condition and the gas is thus permitted to escape. None of them are provided with baffle plates except Newman * * * I think none of these patents contain the element in combination of pressure within the chamber. All of these patents are obviated in their evidentiary effect by restrictions of complainant's specification and claims as made before the Examiner."

Every one of the foregoing statements of the trial court is mistaken, as an examination of this reference will conclusively show. (Defendant's Exhibit "E," Book of Exhibits, page 111.)

Referring to the drawings of McIntosh, Fig. 1 shows the separating chamber with its interior construction or arrangement and connections. In this drawing 3 is the inlet pipe through which McIntosh tell us [line 106, page 1 of this specification] the liquid is "forced into the tank" (or separating chamber). Note that the oil rises through this pipe, and therefore always is subject to the restraining influence of gravity to prevent its "spraying" into the chamber. There is no suggestion anywhere in the McIntosh specification or drawings that the oil is "sprayed" into the chamber as stated by the court. Such finding rests entirely upon unwarranted assumption.

The Trumble construction is far more likely to result in spraying the oil into the chamber than that of McIntosh for the reason that the oil under pressure, oc-

cupying, as it obviously must, the entire space within the inlet pipe 7 of Trumble is forced to pass through a restricted passage of a T 5, such restriction of the size of the opening into the Trumble separator being caused by the passage of gas outlet pipe 25 through such inlet, gas outlet pipe 25 thus performing a function as to restricting the size of the inlet orifice analogous to that of the needle of a needle valve—lessening the flow in much the same manner as the nozzle of an ordinary garden hose.

There is no such restriction of the volume of the inlet pipe 3 of McIntosh; so that it is at once obvious that any tendency to spray would be greater in the case of the Trumble construction than in that of McIntosh; and that, therefore, the finding of the court that McIntosh sprays the oil into the chamber, while Trumble does not, is mistaken.

McIntosh, at line 34, page 1 (Book of Exhibits, page 111) of his specification says:

> "The upper part of the gas discharge pipe is provided with two or more flanges of thin metal, or other material, each inclined downwardly, so that the liquid as it issues from the discharge pipe passes over the upper end of the discharge pipe, and flows down over these inclined flanges of metal, dropping at the circumference of each such flange on to the next succeeding flange below. In this manner, the liquid *flows in thin layers* out from the discharge pipe over the succession of flanges, so that it is spread a series of *thin and extended layers* whereby the gas contained therein in the liquid is freed and collected in the gas chamber." (Italics ours.)

Thus, it appears that the trial court's statement that this patent does not contain baffle plates (that is, does not contain anything similar to or performing the same function as the Trumble spreader cones 22-22a is erroneous. While McIntosh thus describes the elements provided for spreading the oil in a thin film as "inclined flanges 6," it is plain upon comparing figures 1 and 2 of McIntosh that they are substantially, imperforate spreader cones, the function of which is to spread the oil, as described by McIntosh, in "thin and extended layers" in precisely the manner of Trumble's spreader cones 22-22a.

To maintain pressure, McIntosh provides what he describes (line 81, page 1, of his specification) as "an inverted gas bell or holder 8," which he states is constructed so as to prevent leakage or outflow of the gas except through the gas pipe 9.

Now it requires only an inspection of the drawing of McIntosh to discover that this bell 8 would telescope into the lower portion of the chamber 4, and would drop of its own weight until it rested on the top of the oil inlet pipe 3, and the cover of the gas outlet pipe 10, if it were not for gas pressure. In other words, the weight of the bell 8 is at all times resting upon and exerting a compressive force upon, the gaseous contents of the separator chamber.

It will be noted also that the bell 8 operates as a valve to control the outlet of the oil through the oil outlet 7.

With a full understanding of the nature and mode of operation of the McIntosh separator, it is clear that the following finding of the trial court expressed in its opinion (transcript of record, middle of page 536) is untenable; and that, if such interpretation is placed upon the Trumble patent it must be declared void in view of McIntosh. The trial court says:

> "I am impressed that the patentee is not confined to means of causing the oil to flow down the outer wall of the chamber, but that his patent includes any means that will cause the oil to flow down any surface as well, such as a baffle plate or inner partition or wall, which is reached after the emulsified oil enters the chamber. I think therefore, the patentee is not estopped by the proceedings before the Patent Office to insist upon the broader claims."

The last sentence of the immediately foregoing quotation from the trial court's opinion should be considered in the light of the fact that the Patent Office, as in the case of the Cooper patent and also of the Newman patent (hereinafter to be considered), entirely overlooked this patent to McIntosh and did not cite it at all during the prosecution of the Trumble application.

Can McIntosh Be Avoided as an Anticipation of the Trumble Claims?

Yes, as in the case of Cooper—by a strict and narrow interpretation of the Trumble claims in the light of the specification, drawings and the proceedings

before the Patent Office. In view of the fact, however, that McIntosh, as well as Cooper, discloses what the trial court found (or assumed to be) a contribution to the art by Trumble, namely, the flowing of the oil, as the court says in its opinion, (transcript of record, middle of page 536), "down any surface"—not confining such surface to the outer wall of the chamber—but "any surface * * * such as a baffle-plate or inner partition or wall, which is reached after the emulsified oil enters the chamber,"—in view of such fact why should this court strain to find invention? This method of close and fine interpretation is often necessary where there has been a *valuable contribution to the art*, which it is desired to protect, but where is the contribution of Trumble?

McIntosh, however, may be avoided as an anticipation (if we shut our eyes to the question of invention) by construing the Trumble claims as covering a combination of imperforate spreader cones which spread the oil over the wall of the chamber, so that the oil is first spread upon the cones and by them is later spread upon the walls, and no part of the oil falls to the bottom of the separator without being so spread—but as often before suggested, if this interpretation is adopted, under the same interpretation defendant does not infringe. Manifestly, it would be unjust to this defendant as a representative of the public to adopt one interpretation of the claims for the purpose of avoiding anticipation and another interpretation for the purpose of finding infringement.

NEWMAN PATENT.

Defendant's Exhibit J, Newman Patent (Book of Exhibits, page 136) (Granted Nearly Seven and a Half Years Prior to the Date of the Alleged Invention of Trumble): As With the Other Patents, the Trial Court Is in Error When It Says (Transcript of Record, Page 538) That Newman Injects the Oil in the Form of a Spray. On the Contrary, the Oil Comes Into the Newman Separator in a Much Quieter Condition Than in Trumble. The Oil Not Coming Into the Chamber in the Form of a Spray Is Not "Sprayed" Upon the Baffle-Plate of Newman as Found by the Court; on the Contrary, It Flows Quietly on the Baffle-Plates K^1 and L^1, Is Spread by Them (Particularly by Baffle-Plates K) in a Thin Film, and Is Conducted by Them to the Walls of the Separator Down Which It Flows.

Neither Is It True That Newman Does Not Contain the Element of Pressure.

This Patent, Like Those to Cooper and McIntosh, Was Overlooked by the Patent Office.

All the Trumble Claims in Controversy Read Literally Upon the Newman Disclosure.

The operation of the Newman separator, is as follows: Fluid and gas approaches the separating chamber through the pipe F, Fig. I of the drawing, conducted by this pipe it passes through a "T" coupling

marked E2, and enters the pipe 7. Part of the mixed fluid and gas goes upward and part downward through pipe E. The part which goes upward is again divided at the T coupling I^2, and part proceeds by way of each of the pipes I' to the top of the respective chambers A and B, and then descends through the pipes G and H into the separator to the distributing head or pipe H' and G'. From each of these distributing heads are four inlet pipes G2, and four inlet pipes H2.

The portion of the oil which goes downward after reaching pipe E, enters the respective chambers A and B through pipe E and through T-joint C.

Now it will be seen that the diameter of the first mentioned conduit from the well, namely, pipe F, is substantially the same as all the remaining connections from said pipe F to the distributing pipe G2 and H2, and the bottom inlet through the T coupling C. The pipe F will be full of mixed gas and oil and at E2 it will be divided. In the pipe E above E2 there will then be one-half of the amount of oil that was carried by the pipe F. At I^2 this one-half will again then be divided. The one-fourth then flowing through I', for instance, will again be divided four times when it reaches the distributing pipe G2. The one-fourth of the contents of pipe F which finally reaches the distributing head H' is divided four times, thus, only one-sixteenth of the original volume flowing through pipe F reaches each of the distributing pipes G2. Manifestly, a volume of oil equal to one-sixteenth of the

area of the pipe is only a small trickle. In view, therefore, of the amount of fluid which reaches each of the openings into the chamber, and the comparative size of such openings there is nothing to cause the oil to spray, consequently it must flow quietly upon the conical spreader K1, which reduces it to a thin film and such spreader conducts such film to the wall of the separator.

Newman tells us specifically that one of the objects of his invention, and particularly of those provisions for the repeated dividing of the oil was (line 11, page 1 of the specification) *"to distribute the force of the gas, especially in high pressure, so as to eliminate the spray."* (Italics ours.)

In view of this, how can the finding of the trial court (transcript of record, page 538) that Newman "injects the oil from the well in the form of a spray" be sustained. *That is clearly just what Newman does not do.*

Now, the only other objection of the trial court to Newman as an anticipation, or as requiring a most strict construction of the claims was that he *thought* it did not contain the element of pressure. Upon what this surmize of the court was based does not appear. The Newman specification on this question of pressure is similar to that of Cooper: At line 11, page 1, of his specification, Newman states the object of the invention as being to distribute the *force of the gas especially in high pressure.* At line 70, page 1, Newman specification, he refers to his float and tells us it "thereby equalizes the pressure."

All that we have said regarding pressure under the first head of our argument applies to the Newman device.

It only requires a comparison of the claims of Trumble in controversy (claims 1 to 4, inclusive) with the Newman disclosure to demonstrate that they read *literally* on Newman.

It is clear that if the Trumble claims are to be construed as covering (trial court's opinion, transcript of record, page 536), "any means that will cause the oil to flow down," not only the walls of the chamber, but "any surface as well, such as a baffle-plate" (which interpretation was necessarily adopted by the trial court in order to find infringement), the Trumble patent will be anticipated and void in view of Newman.

Can Newman Patent Be Escaped as an Anticipation of the Trumble Claims in Suit?

As we have seen, the operation of the Newman separator is in accordance with the principle most emphasized by the trial court as constituting the invention of Trumble: The oil flows quietly into the separator without agitation. It spreads upon the baffle-plate K' in a thin film. In such film-like condition, it is deflected on the walls of the separating chamber; and while flowing over these extended surfaces is subject to pressure. This patent, as before stated was granted over seven and a half years prior to the date of the alleged invention of Trumble. Certainly there was nothing new in either the *principle*

of operation or *means* for which Trumble was evidently contending.

And Trumble's claims in controversy literally describe the Newman device.

It does not seem possible that the Patent Office would have allowed the Trumble claims if the Newman patent had been discovered in the examiner's search. However, if plaintiffs' counsel is able to point out any patentable difference between Trumble and Newman, we ask the court to consider such difference on the question of infringement.

NO PRESUMPTION OF VALIDITY.

Three Most Important Patents Granted Long Prior to the Pretended Invention of Trumble, Namely, the Patents to Cooper, McIntosh, and Newman, Each of Which Contains the Combination of Elements Described in the Trumble Claims; and, What Is of Equal Importance, Each of Which Contains the Alleged Essence of the Trumble Invention, Were Overlooked by the Patent Office Upon the Trumble Application. No Reasonable Theory of Patenable Novelty or Invention Can Be Found Which Would Have Supported the Allowance of the Claims in Controversy Over These References Had They Been Discovered. This Destroys Any Presumption of Validity of the Trumble Claims.

While we have not strenuously urged invalidity of the Trumble claims in view of the art, either because of anticipation of non-invention (being earnestly of

the opinion that our defense of non-infringement was sufficient) we deem emphasis to be justified upon the fact that three references reading literally on the Trumble claims were overlooked by the Patent Office, in view of the finding of the trial court (transcript of record, two-thirds down page 536):

> "I think, therefore, the patentee is not estopped by the proceedings before the Patent Office to insist upon the broader claims,"

—and in view of the further finding (transcript of record, bottom of page 538) reading:

> "All these patents are obviated in their evidentiary effect by the restrictions of complainant's specification and claims as made before the examiner."

Of course, if these patents were not discovered by the examiner, and were not consequently before the Patent Office, it can hardly be said that their effects were obviated by changes made in the specification and claims before the examiner. As we have seen, however, in the discussion of these patents, there were in fact no such restrictions made, otherwise the claims would not read, as they do, literally on the disclosures of these patents. It follows that the quotation by the trial court from the case of National Hollow Brake Beam Co. v. Interchangeable Brake Beam Co. 106 Fed. 693 (transcript of record, page 535) to the effect that there is no estoppel operating against applicant from claiming what is not disclosed by the references cited by the Patent Office, is not in point.

Of course, even if these patents had been discovered and cited by the examiner, the patent claims could not be sustained when they read in letter as well as in spirit upon the disclosure of such prior patents.

As to the effect of failure of the Patent Office to cite references, see Walker on Patents, 5th Ed., Sec. 491, page 557, and cases cited. In American Soda Fountain Co., v. Sample, 130 Fed 145, at the bottom of page 149, the court says:

> "* * * we think the force of that presumption is much diminished, if not destroyed, by the lack of any reference by the examiner to, or consideration of, the "Clark" patents. It does not seem likely that an expert examiner would pass them by, without notice or consideration, if they had been called to his attention. We feel compelled, therefore, to the conclusion, that the first and fifth claims of the patent in suit are invalid for want of patentable novelty."

BRAY PATENT.

Defendant's Exhibit "H," Bray Patent (Book of Exhibits, Page 127) Is in All Material Respects the Same Device as That of the Trumble Patent Except That the Conical Spreader Plates of Bray Have Holes in Them. However, an Examination of Figures 2 and 3 of Bray's Drawings Shows That a Large Portion of the Surface of Such Spreader Cones Is Inperforate, and the Oil Flowing Into the Separator First Strikes the Apex of Bray's Cones, Is

Spread Out and Flows in a Thin Film for Some Distance, Exactly as Provided for by Trumble, Before It Reaches the First Line of Holes.

If the Trial Court Was Correct in Finding That [Transcript of Record, Page 536] Trumble "Is Not Confined to Means of Causing the Oil to Flow Down the Outer Wall of the Chamber," But That His Patent Covers, "Any Means That Will Cause the Oil to Flow Down Any Surface as Well," Clearly the Inventive Idea of Trumble Is Anticipated by Bray.

Bray Also Provides for Pressure; and During the Prosecution of the Trumble Application Involving Discussion of the Bray Patent, It Was Never Even Suggested Otherwise.

The Trial Court's Understanding of This Reference Is Glaringly Erroneous, for Oil Is Not "Sprayed" Into Bray's Device as Found by the Court; and Bray Does Have Baffle Plates, the Trial Court's Intimation to the Contrary Notwithstanding.

The Findings of Infringement Could Only Have Been Arrived at by Overlooking the Extreme Pertinence of Bray as a Reference, and by Losing Sight of the Controlling Admissions Forced From Trumble by Reason of the Citation of Bray in the Proceedings Before the Patent Office.

We have repeatedly quoted the trial court's findings as to the state of the art (transcript of record, page 538, but for convenience in considering the reference now under discussion, we repeat. The trial court said:

"The patents introduced as showing the prior art are readily disposed of. [Then mentioning several patents, the court finds that they] "all inject the oil from the well in the form of a spray, having the effect to reduce it to finely divided condition, and the gas is thus permitted to escape. None of them are provided with baffle-plates except Newman, * * * and I think none of these patents contain the element of combination of pressure within the chamber. All these patents are obviated in their evidentiary effect by restrictions of complainants' specifications and claims as made before the examiner. Exhibit 'H,' the Bray patent, is subject to the same criticism. The oil is there precipitated upon perforated cones, and only slightly, if at all, flows down the wall of the chamber or other surface."

It only requires a glance at the drawings of Bray and Trumble to recognize the remarkable similarity between these devices. The oil in Trumble enters through pipe 7 at the top, oil enters the Bray device through the pipe 16, also at the top. Upon its entering into the chamber in each case, it falls upon the apex of a spreader cone. Bray's outlet for the gas is at 17 and the outlet for the oil is at the bottom of the chamber controlled by the valve 5, which is actuated by the float 7. There has been no question raised as to the substantial identity of the respective outlets of Trumble and Bray for oil and gas. The only objection to Bray as a complete anticipation of the Trumble claims (as will appear shortly upon our consideration of the file wrapper contents of

Trumble) was that Bray's spreader cones, having holes through them, all of the oil is not conducted by them to the walls of the chamber, but that some of the oil flows through the holes.

In our argument, *supra,* relating specifically to the McIntosh patent, we considered at length the statement of the trial court that the oil was "sprayed" into the separating chamber in a number of prior patents, notably McIntosh and Bray. We called the court's attention to the fact that the reduction of the inlet area of Trumble by the passing through it of the gas outlet pipe 25 would be more likely to "spray" the oil, after the method of operation of a needle valve, than in McIntosh. The same is true of Bray: the area of the inlet "T" attached to pipe 16 of Bray is not diminished, consequently the oil under pressure is much less likely to spray than in the Trumble device. It is, therefore, clear that the trial court was in error in attempting to differentiate between the Trumble and the Bray disclosures on the ground that Bray "sprayed" the oil into the chamber, while Trumble did not.

As to pressure: we have already considered this matter at length under the first heading of our argument. In addition to this we call the court's attention to the fact as shown in the drawings of Bray (Fig. 1) that the diameter of the outlet pipe 17 is less than that of the inlet pipe 16. This, under the uncontradicted testimony of plaintiffs' expert Ford Harris (hereinbefore quoted) would cause pressure

in the trap, because, by reason of the restricted outlet orifice the oil coming in under great pressure would not have an opportunity to escape rapidly enough, consequently pressure would be backed up in the trap.

In view of the fact that Your Honors have so recently decided (Selectasine Patent Company, *et al.* v. Prest-o-graph Company, *et al.*, 282 Fed., 223, 224), that this court was,—

> "always in accord * * * that the patentee cannot escape from the position which he took before the Patent Office, and the consequence of not having appealed from the action of the Patent Office,"

—and of the further fact that it is most elementary (Walker on Patents (5th Ed.) Secs. 187 and 187a, page 254 and cases cited) that:

> "Letters patent may be construed in the light of the contemporaneous intention of the inventor and of the Patent Office; and to this end recourse may be had to the files of the application papers to see what changes were made in the description and claims while the application was pending in the Patent Office."

—it is quite important that we look to the proceedings before the Patent Office as shown by plaintiffs' Exhibit 2; (Book of Exhibits, page 9). Our consideration of the admissions of this exhibit will show that it was only by the closest and narrowest interpretation that the Trumble claims in controversy were allowed

over Bray (the Patent Office, as before seen, having overlooked Cooper and McIntosh). Consequently, if consistency be observed in holding to such interpretation, we are confident that the court will agree with us that the finding of infringement cannot be sustained.

Defendant's Exhibit "H," Bray patent (Book of Exhibits, page 127) was first cited by the examiner (Book of Exhibits, page 30) on the rejection of claims 1, 2, 3, 4, 5 and 8 as originally presented.

Only one of these claims (original claim 1) need be referred to. Original claim 1 as rejected on Bray (and afterwards acquiesced in by the applicant) reads as follows:

> "1. The combination in an oil and gas separator, of an expanding chamber having a settling bottom, means for delivering oil and gas to the upper portion of the chamber, means for reducing the oil into a finely divided condition to reduce the tension on the gas contained therein, gas outlet means from the chamber and an oil outlet from the chamber intermediate the settling bottom of the chamber and the gas outlet."

In response to the above action the applicant (Book of Exhibits, page 32), cancelled claims 1, 2 and 3 and inserted in lieu thereof the claims now in controversy which were afterwards allowed, renumbering the remaining claims of the original application and making other changes not material to be here mentioned.

The applicant did not attempt to dispute the accuracy of the examiner's decision that the claim above quoted (namely, claim 1 as originally presented) was found in Bray; on the contrary, in answering the examiner and cancelling the claim, the applicant not only impliedly acquiesced in the action of the examiner, but at Book of Exhibits page 34 of the file wrapper *expressly* acquiesces in the action of the examiner by remarking, "renumbered claim 9 was not been amended for the reason that applicant's attorneys do not believe that it comes within the inventions shown by Bray or Taylor"—thus clearly implying that they *did* believe with the examiner that the cancelled claims did come within the invention of Bray.

At Book of Exhibits page 35, the applicant clearly defines what he considers the essence of his invention as follows:

> "Applicant's specification and claims are now written to define the peculiar arrangement of applicant's device, which is the means for causing the oil to be divided into a thin flowing body while giving off the natural gases carried in combination therewith and applying pressure to the surface of the oil while undergoing this action. This results in maintaining all of the light, volatile liquids in combination with the oil and raising the gravity of the oil when delivered into the receiving tank."

Attempting to forestall any adverse decision of the examiner that the amended claims (being those now charged to be infringed) were not met by the Bray

patent under discussion, the applicant says (Book of Exhibits page 35):

> "The patent to Bray shows that the oil after being admitted into the expansion chamber is divided into drops or streams and flows downwardly in that condition."

In Book of Exhibits, page 36, in further effort to distinguish the alleged invention of Trumble from that disclosed in Bray and others, the applicant says:

> "Applicant has discovered that in order to maintain the lighter series of oils in combination with the heavier series when separating the gas, it is necessary to reduce the oil to a thin regularly flowing body, which is not subjected to any breaking up action and to permit the gas to escape therefrom without agitation."

All of the references cited would cause a breaking up of the flowing body of oil, or agitation thereof, and result in the carrying away the light volatile oils with the gas."

In response to the above entitled communication of the applicant the examiner (Book of Exhibits, page 38), says:

> "In this patent to Bray while cones may be shown as perforated, these cones will nevertheless deliver the oil to the wall of the expansion chamber to flow downwardly thereover. This patent is also provided with means for automatically drawing off the heavy residue or deposit as well as means for allowing an overflow of the oil therefrom through the pipe 20. The gas is drawn

off from the top of the chamber and whether this gas outlet is centrally located or eccentrally located is immaterial."

In response to this action of the examiner (Book of Exhibits, page 40), the applicant says:

"We cannot understand the examiner's statement that the cones in the Bray patent will deliver oil to the wall of the expansion chamber. The cones Bray calls screens and they evidently make tight closure with the walls of the chamber. An explanation is requested."

Whereupon, (Book of Exhibits, page 41), the examiner responds:

"In reconsidering the case in view of applicant's remarks, it is not seen wherein the applicant is justified in saying that the screens make a tight closure with the walls of the chamber. In the patent the casing 2 is provided with a series of brackets 10 to support the screens. This would not look as if the screens make a tight closure with the walls of the chamber. Furthermore, it is said that the oil or liquid passes *down over* the screens and into the cones 1. This would imply that the heavy liquid reaches the casing and passes down its walls. There does not seem to be any authority for assuming that the liquid will do otherwise. While the screens in the patent are perforated it is evident that these perforations are for the passage of the separated gases on their way to the outlet pipe 17, since the heavy liquid would be too thick to pass therethrough."

On the same page of the file wrapper contents, the examiner again rejects the claims here in suit, being claims 1 to 4, inclusive, holding that they were not "patentably distinguishable" from the referennces of record. In response to this last action rejecting the claims, applicant specifically DEFINES HIS INVENTION IN A WAY WHICH UNMISTAKABLY DIFFERENTIATES IT FROM BRAY AND BY THE SAME TOKEN DIFFERENTIATES IT FROM DEFENDANT'S DEVICE NOW CHARGED TO BE AN INFRINGEMENT. At Book of Exhibits, page 42, the applicant responds:

> "Applicant's invention consists of a containing vessel, an *imperforate cone* adapted to spread the *whole* body of the oil *to the outer edge of the vessel,* and means for taking *off gas from the interior of the cone* near the center of the vessel. In the Bray patent there is *no means for spreading the oil,* and even if the examiner holds that screens 11, 12 and 13 spread a portion of the oil, he cannot avoid the conclusion that oil will pass through a screen and that some oil will not be spread." (Most of italics ours.)

Note very particularly that it was not attempted to differentiate the Bray disclosure in any way from that of the claims now in controversy on the ground that Bray did not *disclose means for maintaining pressure.* This is obviously because there are plainly disclosed means in the Bray patent (Fig. 1) for maintaining such pressure, namely, the difference in diameter between the intake pipe 16 and the outlet 17, the inlet being larger than the outlet—which would necessarily build up a pressure. It is clear from this

that the patentee was not claiming as the essence of his invention any means for maintaining pressure, because if he had emphasized this particular feature of his device, he would have been met by many references of record which would have shown it to have been old to have applied a valve such as disclosed in Trumble for maintaining pressure to a trap of this character. The argument upon which this patent was allowed over Bray was clearly that the cones of Trumble, performed the *double function* of spreading all the oil in a thin film and of conducting all the oil so spread to the walls of the Trumble separator, while those of Bray had holes in them which impaired the functions of both spreading and conducting.

It follows, therefore, that the elements described substantially in the claims of Trumble as "means within the chamber adapted and arranged to distribute the oil over the walls of the chamber," which (as is made especially clear in the last above quoted applicant's argument before the Patent Office) is an "imperforate cone adapted to spread the whole body of the oil to the outer edge of the vessel,"—is a most important element of the Trumble combination, and the question of its equivalency is to be determined (in accordance with the legal definition of an equivalent: *by all its functions as well as by the manner in which it performs those functions.*

If applicant's argument that Bray's cones are not the equivalent of Trumble's cones because they do not spread *all the oil* out in a thin film and conduct

it in such form to the wall of the separator is found valid, it follows necessarily that defendant's devices, *employing no element whatever performing such double function of spreading and conducting are not infringements.*

Look at Fig. 3 of Bray and observe how the center of the upper cone 13 operates to spread the oil in a thin film,—and to spread *all the oil* in such film—in a far more effective manner than is shown in defendant's devices in controversy.

In view of this clear spreading of the oil in a thin film on the imperforate portion of the cone of Bray, how can the trial court's conclusion (transcript of record, middle of page 536) reading:

> "I am impressed that the patentee is not confined to means of causing the oil to flow down the outer wall of the chamber, but that his patent includes any means that will cause the oil to flow down any surface as well, such as a baffle-plate or inner partition or wall, which is reached after the emulsified oil enters the chamber."

—be sustained? Manifestly, any such breadth of interpretation as here suggested by the trial court would render the claims anticipated in and void in view of Bray; and, furthermore, would totally disregard the close and narrow definition of his alleged invention which Trumble was compelled to adopt before the Patent Office in order to prevail upon the examiner to allow his present claims. Clearly, the examiner allowed the claims because of the interpretation placed upon them by Trumble.

TAYLOR PATENT.

Defendant's Exhibit "F," Taylor Patent (Book of Exhibits, Page 115): The Trial Court [Transcript of Record, Page 538] Totally Misread and Misunderstood the Taylor Specification and Drawings: First, It Is Not True, as Found by the Trial Court, That in Taylor the Oil From the Well Is Injected in the Form of a Spray; on the Contrary, There Is Nothing Having the Function of a Spraying Device or Which Could by Any Possibility Cause the Oil to Spray, or Which Even Remotely Resembles a Spraying Device, Illustrated or Described by Taylor. Second, It Is Not True as Found by the Trial Court That Taylor Is Not Provided With Baffle-Plates; on the Contrary, the Particular Means for Effecting the Separation in the Taylor Device Consists of Inclined Baffle-Plates Upon Which the Oil Is Spread in a Thin Film; Third, It Is Not True as Suggested by the Trial Court, That Taylor Does Not Contain the Element of Pressure Within the Chamber; on the Contrary It Would Be Impossible to Use This Device as Described by Taylor Without Having the Contents of the Chamber Constantly Under Great Pressure. In Fact, Taylor Distinctly Tells Us (Line 85, Page 1, of His Specification) That Sediment Accumulating in the Bottom of the Chamber Will Ordinarily Be Removed by the Pressure.

It Is Manifest That the Trial Court Could Not Have Found as It Did [Transcript of Record, Page 536] That Trumble "Is Not Confined to Means Causing the Oil to Flow Down the Outer Wall of the Chamber, but That His Patent Includes Any Means That Will Cause the Oil to Flow Down Any Surface as Well, Such as a Baffle Plate or Inner Partition or Wall, Which Is Reached After the Emulsified Oil Enters the Chamber,"—if It Had Correctly Read and Understood the Taylor Reference; for the Taylor Disclosure Comes Exactly Within This Language of the Court.

Taylor Can Only Be Avoided as a Complete Anticipation of the Claims in Suit by the Strictest Possible Interpretation, That Is to Say, by Reading Into the Claims Limitations or Interpretations Suggested in the Proceedings on the Trumble Application, Under Which Interpretation (as Will Later Appear) Defendant Does Not Infringe.

Taylor (Book of Exhibits, page 115), covers a steam separator, but steam is a gas, and the object of the invention of Taylor as described at line 15, on page 1 of his specification is to separate grease and oil from the steam in passing from the boiler to the steam chests of the cylinders of the engine. It will be noted that the trial court attempted no distinction upon the ground that Taylor did not describe one of the obvious uses to which his device might be put, namely, con-

nection to an oil well to separate gas and oil. Neither did Trumble during the prosecution of his application through the Patent Office attempt any such distinction. The patent to Taylor was cited by the examiner as pertinent and such pertinence was not questioned by Trumble. It has never been even suggested that this Taylor device might not have as ready an application for the separation of oil from hydro-carbon gas as for the separation of oil from water gas.

A mere glance at the drawings is sufficient to understand the operation of the device when it is explained that the oil enters the chamber through inlet pipe 3a. At line 42, page 1, of the Taylor specification, the patentee states that there is mounted upon the interior of the separating chamber "baffle-plates 4, having preferably a downward inclination and projecting from opposite walls of the drum [separating chamber] alternately, their edges approaching the wall opposite that on which they are mounted."

It is obvious that when the oil enters the pipe 3a, it must, as stated by Taylor, line 74, page 1 of his specification, "flow downward over the surface of the baffle plates 4." The gas will pass out through the funnel-shaped opening 7 and through the outlet pipe 6, while the liquid falls to the bottom of the chamber, and its outflow is regulated, as in the case of Trumble by a float-actuated valve. A modified construction of the device is illustrated in Fig. 4 of the Taylor drawings.

The exceedingly narrow interpretation which Trumble was compelled to adopt to secure an allowance over Taylor of the claims now in controversy is shown by the proceedings upon the Trumble application (Plaintiffs' Exhibit, File Wrapper and Contents, Book of Exhibits, page 9). Original claim 8 of the Trumble application (Book of Exhibits, page 25) was rejected upon this patent to Taylor as well as others. Said claim reads as follows:

> "In an oil gas separator, the combination of an expansion chamber, means within the chamber to divide the oil to reduce the surface tension of the oil upon the gas contained therein, an oil outlet from the bottom of the chamber, an oil inlet through the top of such chamber arranged to deliver oil onto the top of the oil and dividing means, and gas outlet means comprising a pipe passing upwardly through the oil inlet supporting the oil dividing means within the expansion chamber."

In response to this action of the Patent Office in disallowing original claim 8, (afterwards renumbered claim 9, the applicant says (Book of Exhibits, page 36):

> "The patent to Taylor is not considered as being adaptable for the use of applicant's invention for the reason that no separation of oil and gas could be effected until both had passed the second baffle from the bottom, as a film of oil started on the upper baffle would flow downward to the lower edge and would fall over in a flowing mass onto the next succeeding plate, and any gas freed in the upper chamber would have to pass through

such body of oil before it could escape into the chamber formed between the two upper baffles, and this same action would take place at each succeeding fall of oil from the edge of the baffle plates. This would cause an agitation of the oil which would have a tendency to carry off the lighter series of oil with the gas.

Applicant has discovered that in order to maintain the lighter series of oils in combination with the heavier series when separating the gas, it is necessary to reduce the oil to a thin regularly flowing body which is not subjected to any breaking up action, and to permit the gas to escape therefrom without agitation."

There was no contention whatever throughout the file wrapper, that the Taylor patent or any of the others did not show means for maintaining pressure. The argument always was that they did not show means for spreading in a thin film, conveying in such condition all the oil to the wall of the chamber, and allowing it to quietly flow down the wall as contradistinguished from causing it to be violently broken up by contact with various obstructions and falling from a height.

Of course, what the patentee and the Patent Office examiner said during the prosecution of the application is not conclusive as to the facts. A reading and comparison will show that the Trumble claims in controversy (claims 1 to 4 inclusive), correctly describe the disclosure of Taylor. In other words, the differences pointed out by applicant to escape Taylor as an

anticipation were not inserted into the claims. In order to save them from anticipation by Taylor, therefore, it manifestly becomes necessary to read the Trumble claims in the light of the interpretation placed upon them in the proceedings on the Trumble application. If this is to be done for the purpose of avoiding Taylor as an anticipation, it should of course be followed when considering the question of infringement.

BARKER PATENT.

Defendant's Exhibit "G," Barker Patent, (Book of Exhibits, Page 121) was the Only Prior Patent Concerning Which the Trial Court's Finding as to the State of the Art (Transcript of Record, Page 538) was Partially Correct. It is True, as Stated by the Trial Court, That in Barker the Oil Would be Injected in the Form of a Spray; and it is Also True That Barker Does not Provide Baffle Plates; but it is not True as Found by the Court That Barker Does not Contain the Element of Pressure Within the Chamber; on the Contrary, Barker Specifically Provides Means to Prevent the Bursting of the Separating Chamber From Overpressure of Gas.

The Barker Patent is Important as Showing, in Connection With its Discussion on the Trumble Application, the Compulsion Which Trumble

was Under to Emphasize His "Means for Distributing Oil Over the Wall of the Chamber," (Substantially Claims 1 to 3, Inclusive,) and "Means Within the Chamber Adapted to Cause the Oil to Flow in a Thin Body for a Distance * * * ," (Claim 4) Namely, the Spreader Cones 22 and 22a, as of the Essence of His Supposed Invention Over Barker. (Which Cones are not Employed in Defendant's Device). It is Also of Great Weight as Having Forced an Admission From Trumble on His Application, That if the Oil Falls From the Head in a Solid Body (as it Does in Part, at Least, in Defendant's Device), it is not Within the Spirit of the Supposed Trumble Invention.

In support of the allowance of the claims now before the court (claims 1 to 4) and for the purpose of anticipating any objection of the examiner to their allowance and of differentiating their subject matter from the references that had theretofore been cited, the applicant says (Book of Exhibits, page 35):

> "In the Barker patent there are no means shown for expanding the oil in such a manner that it may flow in a *thin film* but must fall from the head 8 either in a solid body or if accompanied by sufficient pressure in a sprayed or broken up condition." (Italics ours.)

Notice that Trumble does not urge as being of the essence of his invention or supporting patentability of his structure over the prior art the means to maintain

pressure within the chamber, nor does he question the fact that such pressure means being old, it would not constitute invention to add the same to the Barker patent if they were not shown therein. The applicant apparently recognized that the Barker patent showed that the tank operated under a pressure, and had pressure maintaining means, as the patentee, beginning line 86, page 1, of the Barker specification (Book of Exhibits, page 122), says:

> "Should the water entering the tank contain more gas than is utilized or can be carried off by the pipe 12, the pressure of the gas thus accumulating in the tank will force the water down below the open end of the discharge pipe and will escape through said pipe, thus preventing the bursting of the tank from an over-pressure of the gas. As soon as the gas has thus liberated itself through the overflow pipe, the water will again rise therein and will remain at a level with the upper portion of the overflow pipe until the gas in the tank again reaches a pressure sufficient to force the water down and out of the overflow pipe. By this arrangement, the danger of the bursting of the tank from an overpressure of the gas is entirely eliminated."

Estoppel by Proceedings in the Patent Office.

The Trumble alleged invention was obliged to squeeze itself into exceedingly diminutive proportions in order to squirm through the meshes of the Patent Office machinery; it tried, in combination with the other elements, to have the oil in a "finely divided condition"

(original claim 1, Book of Exhibits, page 22), but this was found too broad, whereupon it contracted to "peculiar arrangement which is the means for causing the oil to be divided into a thin flowing body." (Book of Exhibits, page 35.) This "thin flowing body" was, in view of Cullinan (Book of Exhibits, page 35), disclaimed as a "solid stream" and in view of Bray (same page reference) as a series of "drops or streams"; nor could it, in view of Barker (same page reference), be construed "as a solid body" or to cover a "sprayed" or "broken up condition." In fact, it was necessary to narrow "thin flowing body" to "thin film," (Book of Exhibits, pages 31, 35 and 36) which "thin film" is thus shown to have no breadth of interpretation whatever. If this "thin film" was broken or interrupted by falling from one baffle-plate to another (Taylor, Book of Exhibits, page 36), it did not come within the spirit of the alleged invention, nor, if the gas on one side of the film broke through to the other side (same reference); for such falling from baffle to baffle or passing through of bubbles of gas would "agitate" the oil, and if the oil were agitated it was not the Trumble alleged invention. Furthermore, this thin, unbroken, unagitated film must regularly flow (Book of Exhibits, page 36) and should not be subject to "breaking up" or agitation.

Let it be noticed particularly that not even a suggestion is contained throughout the file wrapper contents that pressure might have been lacking in any one of the prior patents. The reason for this was that, obviously, all showed pressure.

But even with several of the partitions between meshes of the Patent Office screen broken by the failure of the Examiner to discover and cite the patents to Cooper, McIntosh or Newman as a bar to the grant, this timid and diminutive "alleged invention" was still too large to wiggle through, so Trumble was obliged to squeeze it still more by defining it as a device in which *all the oil* must be so spread (Book of Exhibits, page 42 to the *"outer edge of the vessel"*; and furthermore, all such oil must be so spread in such thin, unagitated, unbroken film to such outer edge by means of a *"imperforate cone."* (Book of Exhibits, page 42.)

This was the insignificant aspect of the Trumble alleged invention, when it sought for a hole to get through the Patent Office; but now, like the genie in the vase of the Arabian Nights entertainment, it has grown and expanded until it has become the flow under pressure of even a small part of the oil, whether in a film or not, on any surface, or to any extent on such surface, without regard to whether it is agitated, broken up, sprayed, or regularly flowing, or whether it is conducted to the outer edge of the vessel by anything resembling an imperforate cone or not. Its present great size is simply—surface and pressure. As the genie threatened his liberator, the fisherman, with the loss of his life, so this pigmy grown to giant stature by the decree of the District Court, dominating the entire art, threatens its creator with the loss of those things for which the public has paid the price of many seventeen-year grants.

Accordingly, the finding of the trial court that the patentee is not estopped by the proceedings in the Patent Office (said court not having found anything about the proceedings which *should* have taken place in the Patent Office on the Cooper, McIntosh and Newman patents, but which through inadvertence did not take place) does not seem to us to be consistent with reason.

The limitations, explanations, interpretations, and attempted differentiations contained in the Trumble file wrapper contents were put there by the applicant to avoid prior references—to define his supposed invention so as to avoid them—to make clear to the public what Trumble did not deem within the spirit of his proposed claims. Surely, they must have *some* weight. *Certainly, if they had not been made, the Examiner would not have granted the patent.*

Our prior argument has shown that these limitations were reasonable and necessary. If the Patent Office be deemed to have, notwithstanding these references, granted claims which, literally construed, seem to read on such references, then it is clear that such literal interpretation was not intended by the parties to the patent contract. This court, we urge, should not permit an interpretation which would have the effect of nullifying them. Surely, this court had these considerations in mind and was not mistaken as to their application in the case of Selectasine Patent Co., *et al.,* v. Prest-o-graph Company, *et al.,* 282 Fed. 223, where it held that a "patentee cannot escape from the position which he took before the Patent Office."

Defendant's Patented Device Misunderstood by the Trial Court.

In its opinion, transcript of record, page 542, the trial court found that defendant's patent infringes claims 3 and 4, in suit. This finding is based upon a description by the trial court [Transcript of Record, page 537] of what the court evidently understood to be the construction of defendant's said patented device. As we have intimated in our statement of the case, this exposition of the trial court reflects a serious failure to grasp the true significance of the description and drawings of the device in question. As a foundation for a correct decision we must, of course, thoroughly understand the construction and mode of operation of the mechanisms under consideration; we shall therefore, by pointing out the error of the trial court in this regard, endeavor to explain the construction of the Lorraine patented separator.

In attempting to describe the device of said Lorraine patent, the trial court [Transcript of Record, page 537] says:

> "Defendant's patent, referred to in counsel's brief as Model 1, has an inner partition set away from the wall on one side more than one-third the distance of the diameter of the chamber, and extending below the oil level. To this partition, at some distance from the top of the chamber, is attached a baffle-plate extending downward on an incline of perhaps 45 degrees, and to within an inch and a half or two inches from the wall for the entire segment cut off by the partition. The

> oil inlet, consisting of a pipe, extends downward to within a short distance of a baffle-plate. The pipe has two openings, so that the stream of oil is divided and projected on the baffle-plate in two directions laterally. The device is provided with a gas take-off above the partition and one from underneath the baffle-plate, to permit gas to pass off eventually from the upper portion of the major chamber."

It only requires a brief but careful examination of defendant's patent (Book of Exhibits, page 66) to make clear the error of the foregoing description by the trial court.

The court was obviously in error in stating that the inner partition was set away from the wall on one side "more than one-third of the distance of the diameter of the chamber." The partition mentioned by the court is numbered 19, shown in Figs. 4 and 5 of said Lorraine patent (Book of Exhibits, page 67), Place a pair of dividers on these figures of drawings and it will immediately be seen that the partition is exactly one-fourth of the diameter from the wall.

The court also says:

> "To this partition, at some distance from the top of the chamber, is a baffle-plate extending downward on an incline of perhaps 45°, and to within an inch and a half or two inches from the wall for the entire segment cut off by the partition."

This is a mistake. There is no baffle-plate whatever attached to the partition; and it will be noted

that the drawings of the patent are not to scale and so it is impossible to given dimensions in inches.

Instead of being as described by the court, the construction is as follows: Referring to Fig. 4 of the Lorraine patent (Book of Exhibits, page 67), described line 71, page 2, Lorraine specification (Book of Exhibits, page 69), oil enters through the connection 13 from the supply pipe 12 (supply pipe shown in Figs. 1, 2, and 3), and goes downward through the pipe 14. This pipe 14 has around its lower end a sleeve or hood 15, provided at its upper portion with a gas outlet 16. The lower end of this sleeve 15 has an inclined bottom 17, below the open mouth 18 formed in the side of the sleeve. Now, it will be noted that such inclined bottom 17 is of very slight dimensions outside of the inlet passage. (Of course, the oil does not discharge into the separating chamber until it reaches the mouth.) A very gross error of the trial court is that of assuming that such inclined bottom 17 is "attached to the partition," for plainly it is not, being part of the sleeve 15. Furthermore, and very important, it does not extend from the wall "for the entire segment." On the contrary, it is only very slightly (and at its lower side only) larger than the sleeve 15 of which it forms a part. In Fig. 5 of the Lorraine drawings (Book of Exhibits, page 67) is shown the outline in plan of this inclined bottom of the sleeve. In this figure, the sleeve 15 is clearly indicated, and the little triangular corners extending out from each side of the sleeve 15 indicate the relative area of such inclined bottom.

It is thus seen that by far the greatest area of surface of this inclined bottom is covered by the end of the inlet pipe and sleeve and that the extent of its surface within the chamber, upon which the oil might spread, is negligible.

This area is obviously very small as compared with the entire area of the segment of the separator formed by the partition 19. The court was clearly mistaken in assuming that this small inclined impingement plate occupied area nearly equal to this segment.

The trial court was also greatly mistaken in stating (latter part of the immediately preceding quotation) that the "pipe has two openings, so that the stream of oil is divided and projected on the baffle-plate in two directions laterally." There is nothing in the drawings or description of the patent in question to support such statement of the trial court.

Defendant's Patented Device Does not Infringe.

The oil, as we have seen, comes in under great pressure from the well. The supply pipe 12 will be presumably filled with oil under this great pressure. The oil is thus injected violently and partly falling and partly being forced, strikes inclined bottom 17. Now obviously, this inclined bottom is too small to spread all the oil out in a thin film. Why, patents to McIntosh, Cooper, Newman, and Bray all spread the oil out on surfaces far more extended than this diminutive inclined bottom 17. Cooper's wearing plate a, for instance, is of larger comparative dimensions and was so designed and placed that *all* the oil must

be spread on the walls of the chamber, but inclined bottom 17 of defendant's patented device being of approximately triangular shape, only a part of the oil is deflected to the side wall, while there is obviously a very large part which shoots off the sides of the plate and falls to the bottom of the chamber without striking any of the walls of the separator.

Remember, in view of the Bray patent, discussed *supra,* the patentee distinctly in his file wrapper disclaimed a construction in which part of the oil was not spread on the walls of the chamber. Trumble had to do this in view of the disclosure of Bray. Remember, Trumble said his invention consisted in causing the oil to flow in a "thin film," as distinguished from a "broken up" or "agitated" condition. Barker had a small plate similar to the inclined bottom of the Lorraine patent, but Trumble took the position before the Patent Office that such plate would break up or atomize the oil. This is also obviously true of the Lorraine patent. There can be no doubt but that a much larger proportion of the oil, after striking the inclined bottom of sleeve 15, will fall off such plate laterally and will not strike the wall of the separator at all, but will be in a broken up, agitated condition, which Trumble again and again emphasizes throughout his application papers as not his invention. Trumble stated to the Patent Office that his invention consisted of "the peculiar arrangement," which was the "means for causing the oil to be divided into a thin flowing body," namely, not "sprayed," "broken up," not in "drops or streams," not "in a

solid stream," not "irregularly flowing body," and not a device which does not spread the whole body of the oil to the outer edge of the vessel in such thin film, and by use of an imperforate baffle-plate.

We submit that, clearly, defendant's patented device does not infringe.

Construction of Model 2 Described.

The only error we see in the trial court's description of this Model 2 is contained in the implication that, like the court's erroneous description of Model 1 (defendant's patented device), the partition cutting off a segment of the chamber is set away from the wall to which it is nearest about one-third or more the diameter of the chamber. This is not correct. The line of the segment formed by the partition was not more than *one-fourth* of the diameter of the chamber from the nearest wall.

In describing this Model 2, the trial court [Transcript of Record, bottom of page 537] said:

> "Model 2 contains a like partition to that described in Model 1. The oil inlet consists of a pipe extending into the side of the minor chamber, supplied with what is called a nipple, bell-shaped, to allow the oil to spread when discharged into the chamber. The nipple is set at an angle with and extended within proximity of the inner wall, the effect of which is, when the oil is discharged into the chamber, to carry part of it down the inner partition wall, part down the outer wall, at and near the intersection of the inner with the

outer wall, and part of it down by gravity *without reaching either wall.* The device is provided with a gas take-off above the nipple. This sufficiently describes the models to make the application later. I may add, further, that the nipple in the model in evidence is machined off on one side to sit closely against the partition wall. Defendant says this was done through mistake in setting the nipple, the machine having allowed it to extend too far inwardly. If this is true, it only shows how easy it is to set the nipple in without discovery. But we are dealing with the model in evidence, which complainants say infringes their patent."

In order that this description of the trial court may be clear, on the two immediately following pages of this brief we set forth as Figs. 1 and 2 the constructions in question.

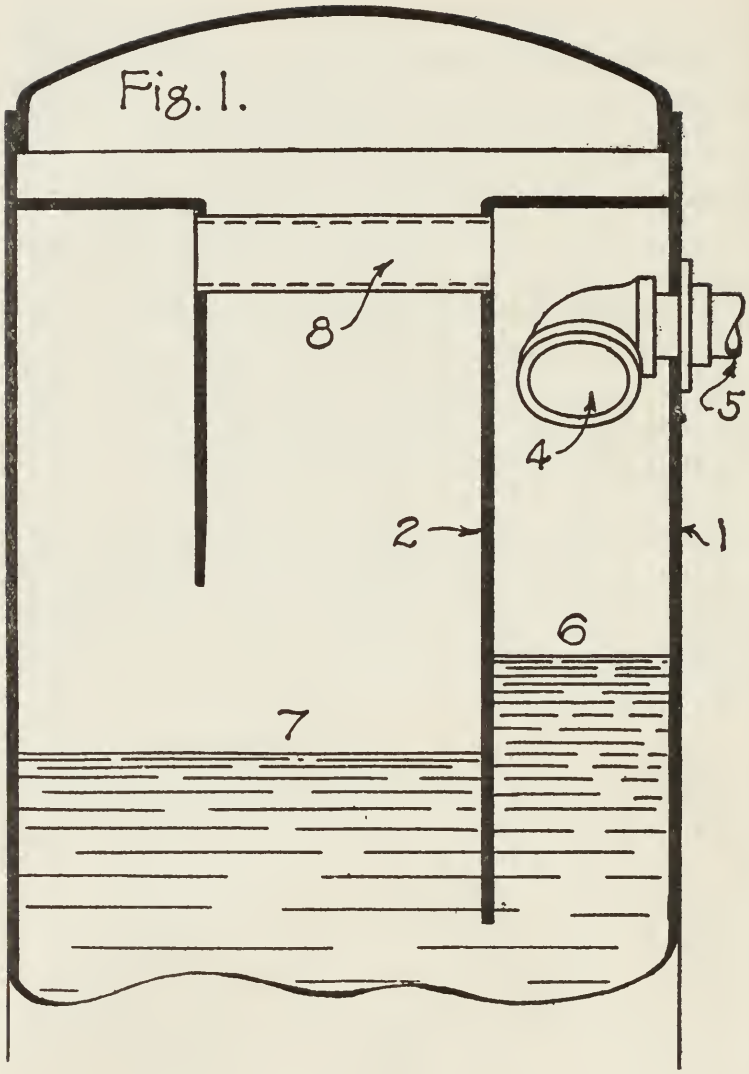
Fig. 1.
8
5
4
2
1
6
7

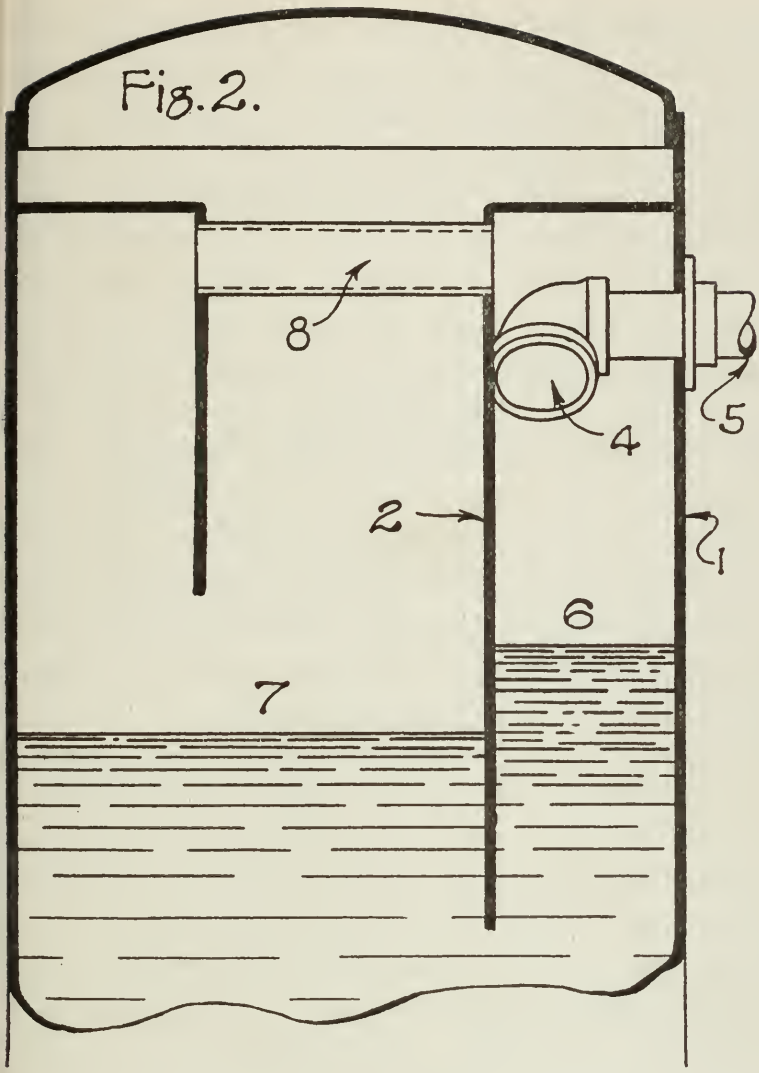

Fig. 1 represents the device of Model 1 as it was usually put out, while Fig. 2 represents the same construction with the so-called nipple machined off, as described by the court, so as to "sit closely against the partition wall." These drawings have been carefully *made to scale*, and correctly represent

the constructions referred to. In Figs. 1 and 2 the wall of the separator is indicated by 1, the partition by 2. and the discharge opening into the chamber by 4. The oil supply pipe leading from the well and connected to the oil inlet 4 is indicated by 5. The oil level in the portion of the separator called the minor chamber by the court, is indicated by 6, and the level of the oil in the portion of the separator called by the court the major chamber, is indicated by 7. Opposite to the partition 2 is a short partition and extending between the partitions is a pipe 8. Gas which arises from the oil in the minor chamber passes through the pipe 8 across the separator behind the short partition, then downwardly below the short partition and upwardly through a gas outlet in the upper portion of the chamber. The gas outlet or take-off means is not of any special pertinence.

Defendant's Model 2 Does not Infringe.

It would seem that a clear understanding of the construction and purpose of the device of this Model No. 2, in the light of the prior descriptions of many other similar devices in the record, especially including defendant's patented device, would render supererogatory any further description of the operation of the device illustrated in the foregoing Figs. 1 and 2. It would seem obvious that the oil coming through the inlet opening 4 *must* in large part fall to the bottom of the separator without striking the walls at all. Indeed, the trial court distinctly so found, stating (near the top of page 538 of the tran-

script of record) that part of the oil descends "by gravity *without reaching either wall.*" And again, at transcript of record page 541, the trial court says that the oil is injected into this Model 2 only "in part at least against the partitions." The court further states [same page reference of the Transcript of Record]:

> "While part of the oil is reduced to a spray and falls by gravity to the settled fluid below, its action does not obviate the objectionable feature of a part flowing down the partition and a part down the wall."

Now, it would seem as clear as the noonday sun that unless the trial court had entertained the erroneous impression that the prior art contains nothing pertinent to the claims, how could such finding of infringement be arrived at? There is a much larger surface in the center of Bray's cone over which the oil is spread in a thin film and down which it flows, and the only difference Trumble was able to point out to differentiate his supposed invention from Bray was that in Bray's device some of the oil would fall to the bottom of the separator without being spread in a thin film over the walls of the separator, by the action of imperforate cones. To find Model 2, either with the so-called nipple machined off or otherwise, an infringement, surely disregards entirely the limitations of the file wrapper contents of the Trumble application. If the patent in suit is construed so that any device in which the oil even *partly* strikes the wall of the chamber is an infringement, then every

patent which we have mentioned or discussed in this brief is a complete anticipation. How, for instance, under such interpretation, can we escape the Cooper patent in which all the oil is directed in a ribbon-like stream upon the walls? Certainly, McIntosh spreads all the oil out in a thin film on extended surfaces of baffle-plates and under pressure.

Again, overlooking for the moment the broad general rule by which the *spirit* of the supposed contribution to the art controls the letter of the claim, as the rule is expressed in, for instance, Westinghouse v. Boyden, 170 U. S. 537, where the Supreme Court said:

> "We have repeatedly held that a charge of infringement is sometimes made out though the letter of the claims be avoided * * *. The converse is equally true"—

ignoring for the moment this broad principle of interpretation, let us look to the letter of the claims.

Claims 1 to 3, inclusive, of Trumble found to be infringed contain the elements described, substantially (Claim 2, for instance) as "means within the chamber adapted and arranged to distribute the oil over the wall of the chamber in a downwardly flowing film." This same element is referred to in Claim 4 as "means adapted to cause the oil to flow in a thin body for a distance."

It is Hornbook law that the omission of a single element of those mentioned in the combination of a claim from a defendant's device defeats a charge of

infringement. Thus, in Pittsburgh Meter Co. v. Pittsburgh Supply Co., 109 Fed. 644, 651, the court said:

> "A claim for a combination is not infringed if any one of the described and specified elements is omitted, without the substitution of anything equivalent thereto."

Baker, Judge, in Adams v. Folger, 120 Fed. 260, states the same law in slightly different language as follows:

> "If a patentee claims eight elements to produce a certain result, when seven will do it, anybody may use the seven without infringing the claim; and the patentee has practically lost his invention by declaring the materiality of an element that was in fact immaterial."

Of course, it follows from this law that we must find some equivalent of each element of the claims of Trumble alleged to be infringed.

Now, it is equally a matter of settled law that the term "means" in a claim, followed by a statement of function, does not extend the scope of the claim in the least—the patentee is, nevertheless, limited to the precise element to which this broad language relates, and its obvious mechanical equivalents, and the term "mechanical equivalent" has a definite technical meaning.

Referring to the word "means" followed by a statement of functions, Walker on Patents (5th Ed.), page 138, Sec. 117a, says:

> "But such general language will not include all means, mechanisms, or devices which can perform that function, but only those which are shown

> in the patent and their equivalent,—citing many cases to which we refer the court."

The same author (Walker on Patents (5th Ed.), page 541, Sec. 358) says:

> "It is * * * safe to define an equivalent as a thing which performs the same function, and performs that function in substantially the same manner, as the thing of which it is alleged to be an equivalent."

We, therefore, turn to the specification and drawings of Trumble, as well as to his file wrapper contents, to discover what the parties to this patent contract meant when they used the language "means to distribute the oil over the wall of the chamber," etc. We have seen that Trumble defines this "means" very specifically, in connection with the statement of what he supposed he actually added to the art, as "an imperforate baffle-plate adapted to spread the whole body of oil to the outer edge of the vessel," *i. e., distribute the oil equally around and over all the walls of the chamber.* Manifestly, there is no such element in defendant's Model No. 2. This element is described as being *within* the chamber. The oil does not reach the chamber until it is discharged from the opening in the so-called bell-shaped nipple, and upon entering into the chamber falls in large part to the bottom of the chamber, only incidentally striking or splashing on the walls. We, therefore, submit that defendant's Model No. 2, either with the so-called nipple set against the partition or away from the partition, does not infringe.

One Other Construction Made by Defendant Urged in the Trial Court to be an Infringement, but Upon Which the Trial Court did not Pass.

There was evidence concerning a separator of defendant, known as Tonner No. 3 trap. The trial court does not mention this separator, and the only findings of the court from which appeal is taken was, first, that defendant's patent infringes Claims 3 and 4; and second, that his Model No. 2 infringes Claims 1 to 4, inclusive, both of which findings we have, under immediately preceding headings of this brief, fully considered.

There is no cross-appeal in this case, and the *failure* of the trial court to find the trap known as Tonner No. 3 as an infringement is not before the court. Accordingly, the only reason that we mention this Tonner No. 3 separator is because the court evidently confused it with the device illustrated and described in defendant's patent. The court's description of what it supposed was defendant's patented device as shown and described in the Lorraine specification and drawings, comes much nearer to describing this Tonner No. 3 separator than it does defendant's patent. On the following page, in Fig. 3, we illustrate this separator.

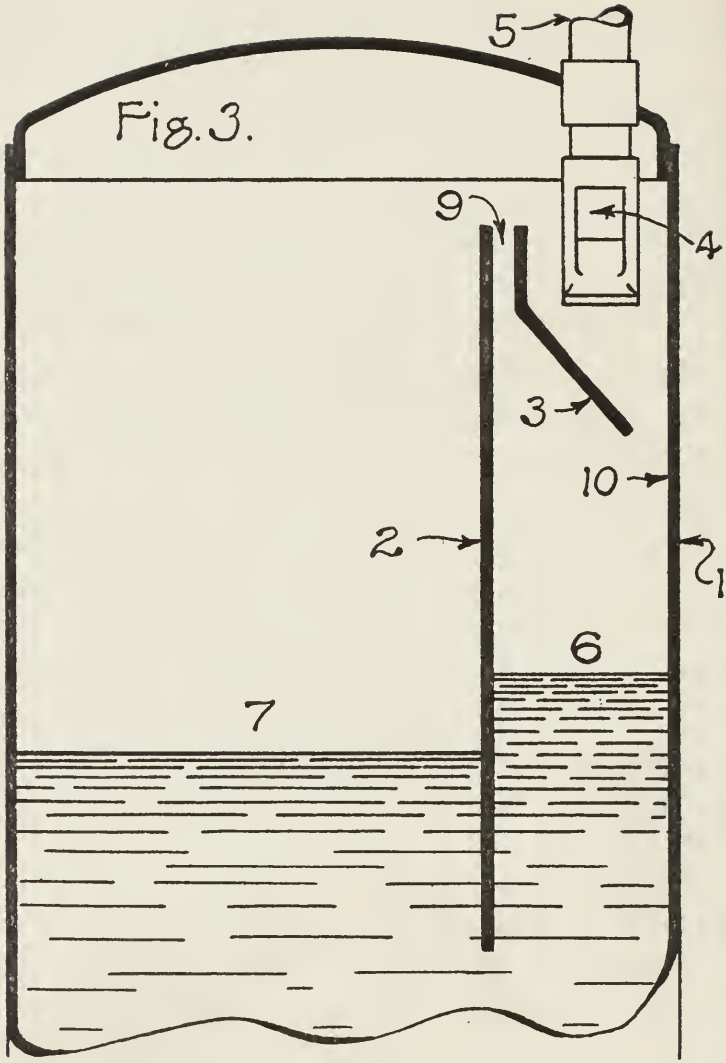

As with preceding Figs. 1 and 2, this Fig. 3 is drawn to scale and correctly represents the distance of the partition 2 from the wall of the separator 1, and also of the downwardly extending plate 3 from the wall of the separator 1. It also correctly illus-

trates the disposition of the inlet 4 and its opening into the chamber of the separator. It will be unnecessary to describe this construction completely by reference to the figures of the drawings, because such description is obvious from a consideration and understanding of Figs. 1 and 2, *supra*. The same description applies with exceptions which we now note: The part 3 extends entirely across the segment cut-off by the partition 2 having the same relative distance from the wall 10 at all points. The pipe has two openings, so that the stream of oil is divided and projected against this inclined plate 3 in two directions laterally. Of course, it strikes against and splashes off the plate and impinges upon the side of the separator; the distance from the opening to the plate 3 being relatively considerable. There is not a quiet, placid flow of the oil into this device. No infringement should be found for the reasons heretofore stated in discussing Figs. 1 and 2, and the further argument is to be noted that this device contains the objectionable feature upon which Trumble relied in differentiation of his invention from Bray, that the oil falls in drops or streams from the inlet. The angle of this plate 3, which is correctly shown in Fig. 3, is too great to permit a spreading out in a thin film and its distance from the wall shows that its design is not to permit any oil film to spread quietly over the wall, but to permit it to fall, in large part at least, violently to the bottom of the chamber. The oil is thus sprayed and broken up and agitated and is not

spread in a thin film to the outer edge of the vessel. Manifestly, much of the oil will not touch the walls, even by splashing upon them. We submit this construction does not infringe, although we believe its consideration irrelevant to this appeal.

Respectfully submitted,

WESTALL & WALLACE,

(Ernest L. Wallace and Joseph F. Westall)

By JOSEPH F. WESTALL.

Solicitors and of Counsel for Defendant-Appellant.